Curs 10

2023/2024

Dispozitive şi circuite de microunde pentru radiocomunicații

Disciplina 2023/2024

- 2C/1L (+1), **DCMR (CDM)**
- **Minim 7 prezente (curs+laborator)**
- Curs - **conf. Radu Damian**
  - Miercuri 08(**:15**)-17, ~~Online~~/**Video (istoric)**, P5
  - E – **50%** din nota
  - **probleme** + (2p prez. curs) + (3 teste) + (bonus activitate)
    - primul test L1: 04.10.2023 (t2 si t3 neanuntate la **curs**)
    - 3pz (C) ≈ +0.5p (**2p** max)
  - **toate materialele permise**

Disciplina 2023/2024

- 2C/1L, **DCMR (CDM)**
- Laborator – **conf. Radu Damian**
  - Miercuri/Joi/Vineri, par/impar, **II.13**
  - L – **25%** din nota
    - ADS, 4 sedinte aplicatii
    - prezenta + **rezultate personale!**
  - P – **25%** din nota
    - ADS, 3 sedinte aplicatii (-1? 21-22.12.2022)
    - tema personala

Cuprins

- Linii de transmisie
- Adaptarea de impedanța
- Cuploare direcționale
- Divizoare de putere
- Amplificatoare de microunde
- Filtre de microunde
- Oscilatoare de microunde ?

Bibliografie

- http://rf-opto.etti.tuiasi.ro
- Irinel Casian-Botez: "Microunde vol. 1: Proiectarea de circuit", Ed. TEHNOPRES, 2008
- **David Pozar, Microwave Engineering, Wiley; 4th edition , 2011, ISBN : 978-1-118-29813-8 (E), ISBN : 978-0-470-63155-3 (P)**

Examen: Reprezentare logaritmică

$dB = 10 \cdot \log_{10} (P_2 / P_1)$

0 dB	= 1
+ 0.1 dB	= 1.023 (+2.3%)
+ 3 dB	= 2
+ 5 dB	= 3
+ 10 dB	= 10
-3 dB	= 0.5
-10 dB	= 0.1
-20 dB	= 0.01
-30 dB	= 0.001

$dBm = 10 \cdot \log_{10} (P / 1\ mW)$

0 dBm	= 1 mW
3 dBm	= 2 mW
5 dBm	= 3 mW
10 dBm	= 10 mW
20 dBm	= 100 mW
-3 dBm	= 0.5 mW
-10 dBm	= 100 μW
-30 dBm	= 1 μW
-60 dBm	= 1 nW

[dBm] + [dB] = [dBm]

[dBm/Hz] + [dB] = [dBm/Hz]

[x] + [dB] = [x]

Linii de transmisie in mod TEM

Cuprins

- Linii de transmisie
- Adaptarea de impedanța
- Cuploare direcționale
- Divizoare de putere
- Amplificatoare de microunde
- Filtre de microunde
- Oscilatoare de microunde ?

Linie fara pierderi

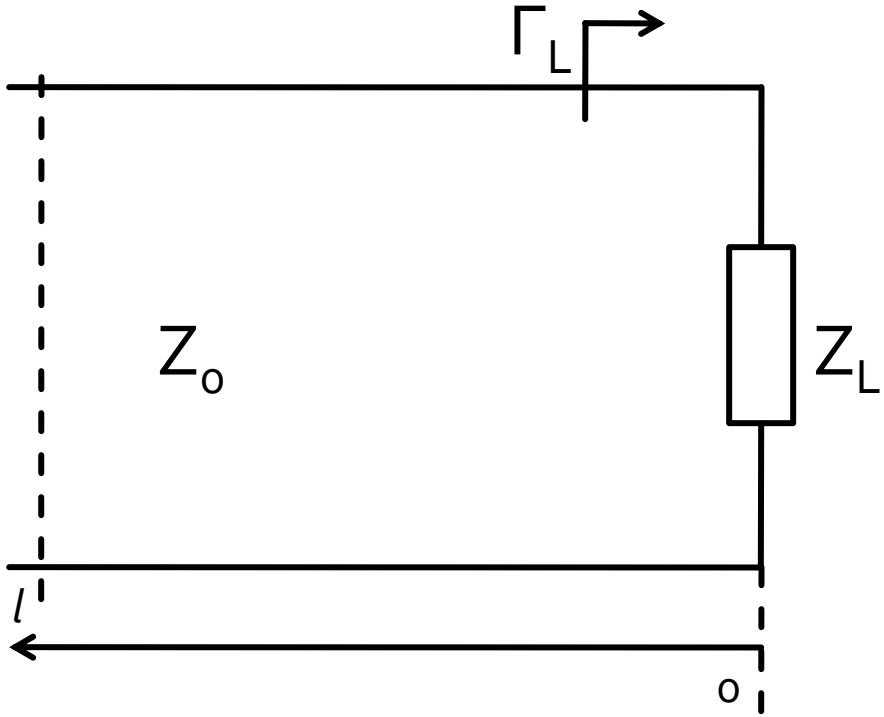

$$V(z) = V_0^+ e^{-j\cdot\beta\cdot z} + V_0^- e^{j\cdot\beta\cdot z}$$

$$I(z) = \frac{V_0^+}{Z_0} e^{-j\cdot\beta\cdot z} - \frac{V_0^-}{Z_0} e^{j\cdot\beta\cdot z}$$

$$Z_L = \frac{V(0)}{I(0)} \qquad Z_L = \frac{V_0^+ + V_0^-}{V_0^+ - V_0^-} \cdot Z_0$$

- coeficient de reflexie in tensiune

$$\boxed{\Gamma = \frac{V_0^-}{V_0^+} = \frac{Z_L - Z_0}{Z_L + Z_0}}$$

- Z_o real

Matricea S (repartitie)

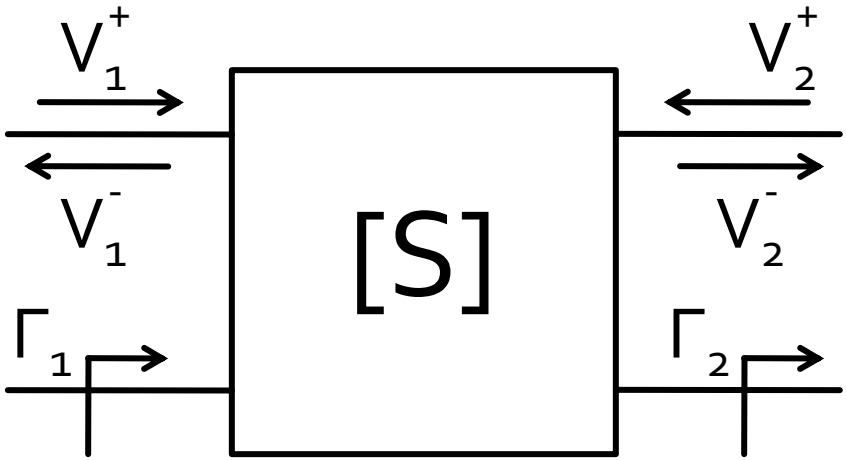

$$\begin{bmatrix} V_1^- \\ V_2^- \end{bmatrix} = \begin{bmatrix} S_{11} & S_{12} \\ S_{21} & S_{22} \end{bmatrix} \cdot \begin{bmatrix} V_1^+ \\ V_2^+ \end{bmatrix}$$

$$S_{11} = \left.\frac{V_1^-}{V_1^+}\right|_{V_2^+=0} = \Gamma_1\big|_{\Gamma_2=0}$$

$$S_{21} = \left.\frac{V_2^-}{V_1^+}\right|_{V_2^+=0} = T_{21}\big|_{\Gamma_2=0}$$

- S11 este coeficientul de reflexie la portul ***1*** cand cand portul ***2*** este terminat pe impedanta care realizeaza adaptarea
- S21 este coeficientul de transmisie de la portul ***1*** (**al doilea** indice**!**) la portul ***2*** (**primul** indice**!**) cand se depune semnal la portul ***1*** si portul ***2*** este terminat pe impedanta care realizeaza adaptarea

Matricea S (repartitie)

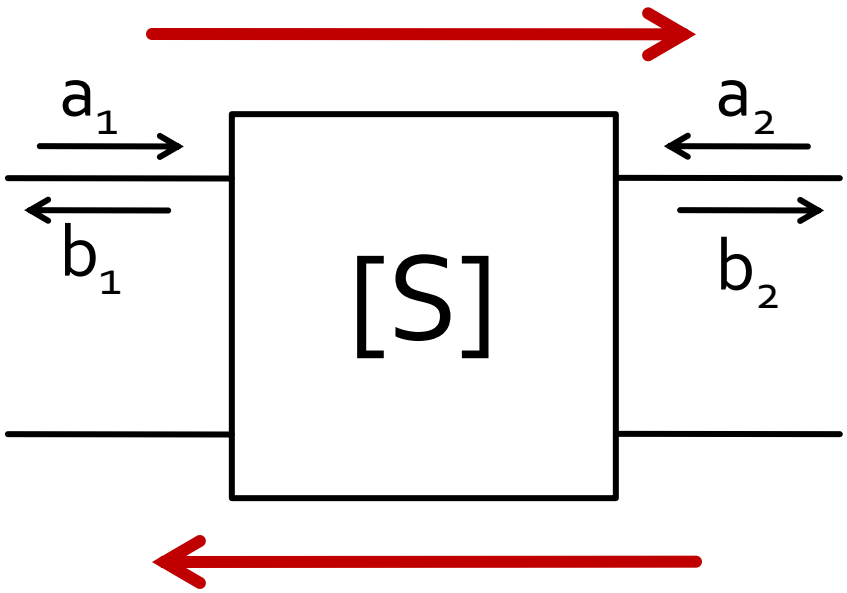

$$\begin{bmatrix} b_1 \\ b_2 \end{bmatrix} = \begin{bmatrix} S_{11} & S_{12} \\ S_{21} & S_{22} \end{bmatrix} \cdot \begin{bmatrix} a_1 \\ a_2 \end{bmatrix}$$

$$|S_{21}|^2 = \frac{Putere\ sarcina\ Z_0}{Putere\ sursa\ Z_0}$$

- a,b
  - informatia despre putere **SI** faza
- S_{ij}
  - influenta circuitului asupra puterii semnalului incluzand informatiile relativ la faza

Cuprins

- Linii de transmisie
- Adaptarea de impedanța
- Cuploare direcționale
- Divizoare de putere
- Amplificatoare de microunde
- Filtre de microunde
- Oscilatoare de microunde ?

Adaptare dpdv al puterii

$$Z_L = Z_i^*$$

Daca se alege un Zo real

$$\Gamma = \frac{Z - Z_0}{Z + Z_0}$$

$$\Gamma_L = \Gamma_i^*$$

- numere complexe
- in planul complex

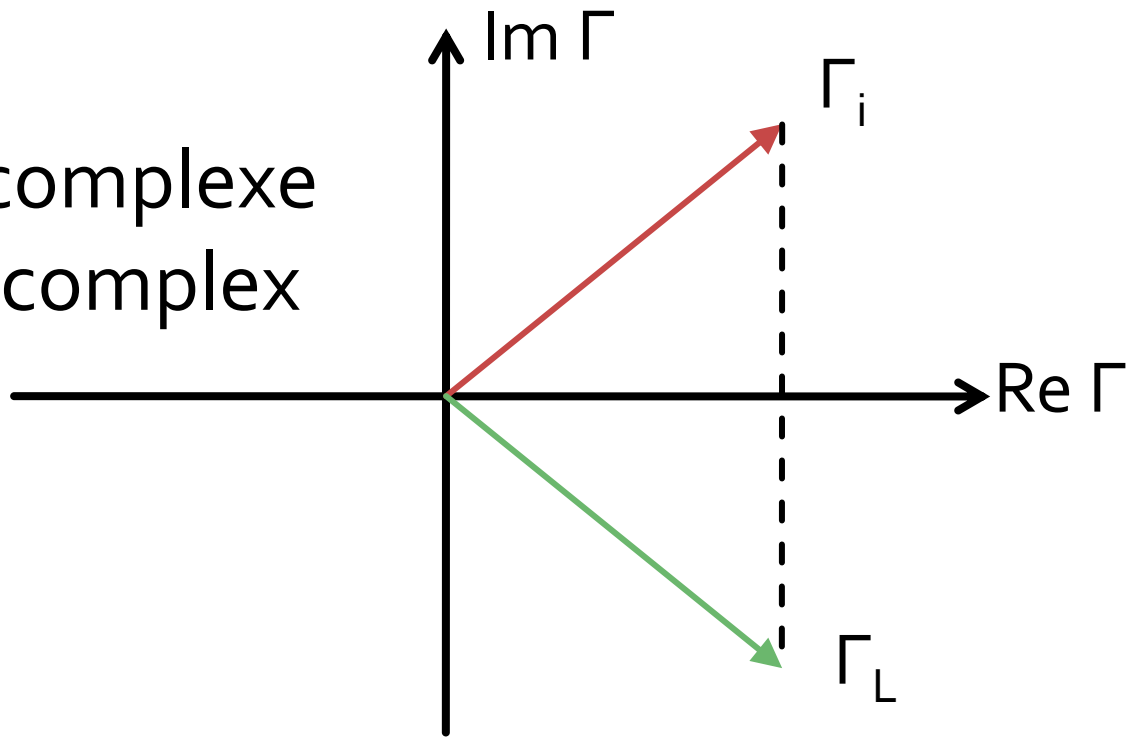

Reflexie de putere / Model

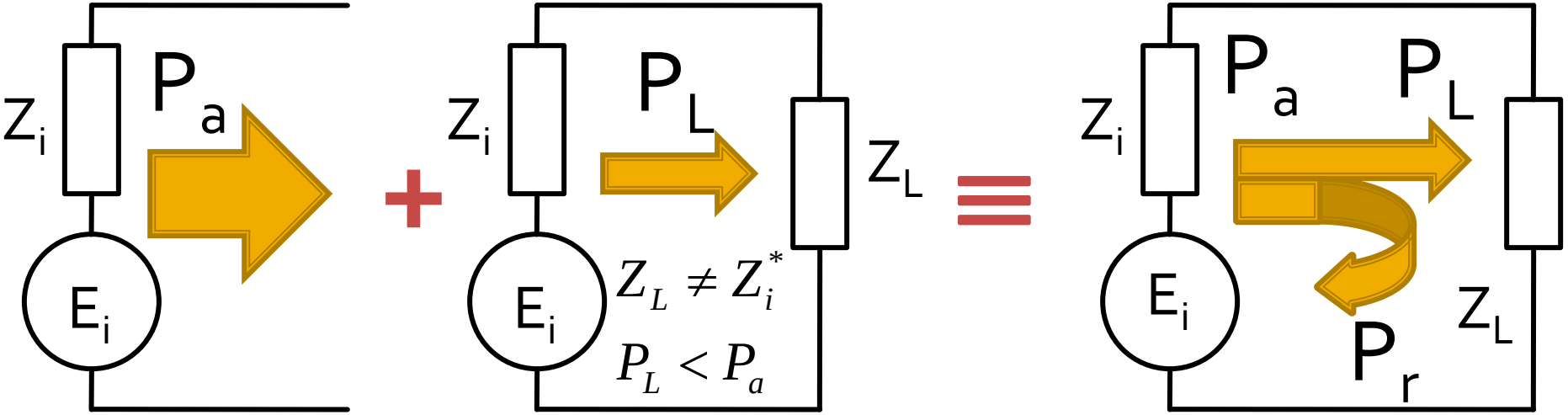

- Generatorul are posibilitatea de a oferi o anumita putere maxima de semnal P_a
- Pentru o sarcina oarecare, acesteia i se ofera o putere de semnal mai mica $P_L < P_a$
- Se intampla **"ca si cum"** (model) o parte din putere se reflecta $P_r = P_a - P_L$
- Puterea este o marime **scalara!**

Adaptarea de impedanța

Diagrama Smith

Cuprins

- Linii de transmisie
- Adaptarea de impedanța
- Cuploare direcționale
- Divizoare de putere
- Amplificatoare de microunde
- Filtre de microunde
- Oscilatoare de microunde ?

Diagrama Smith

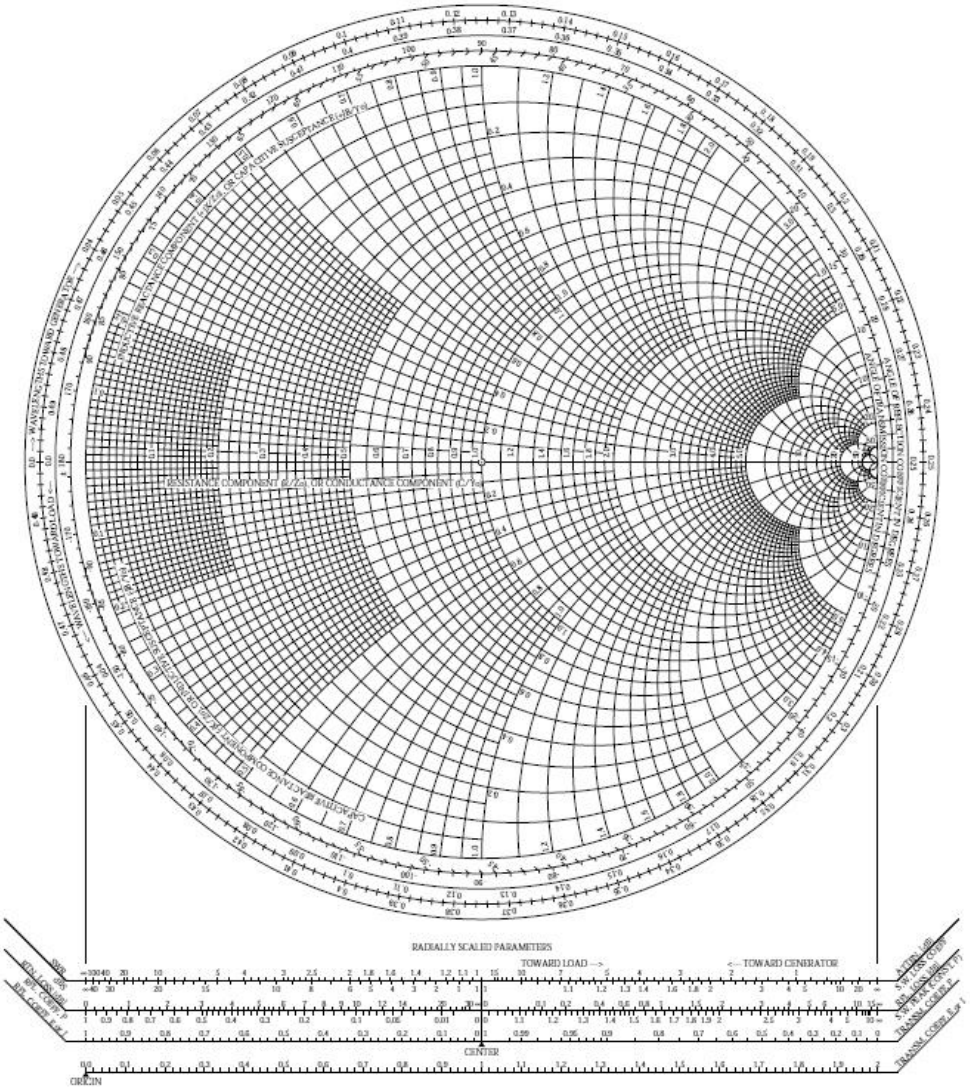

Diagrama Smith

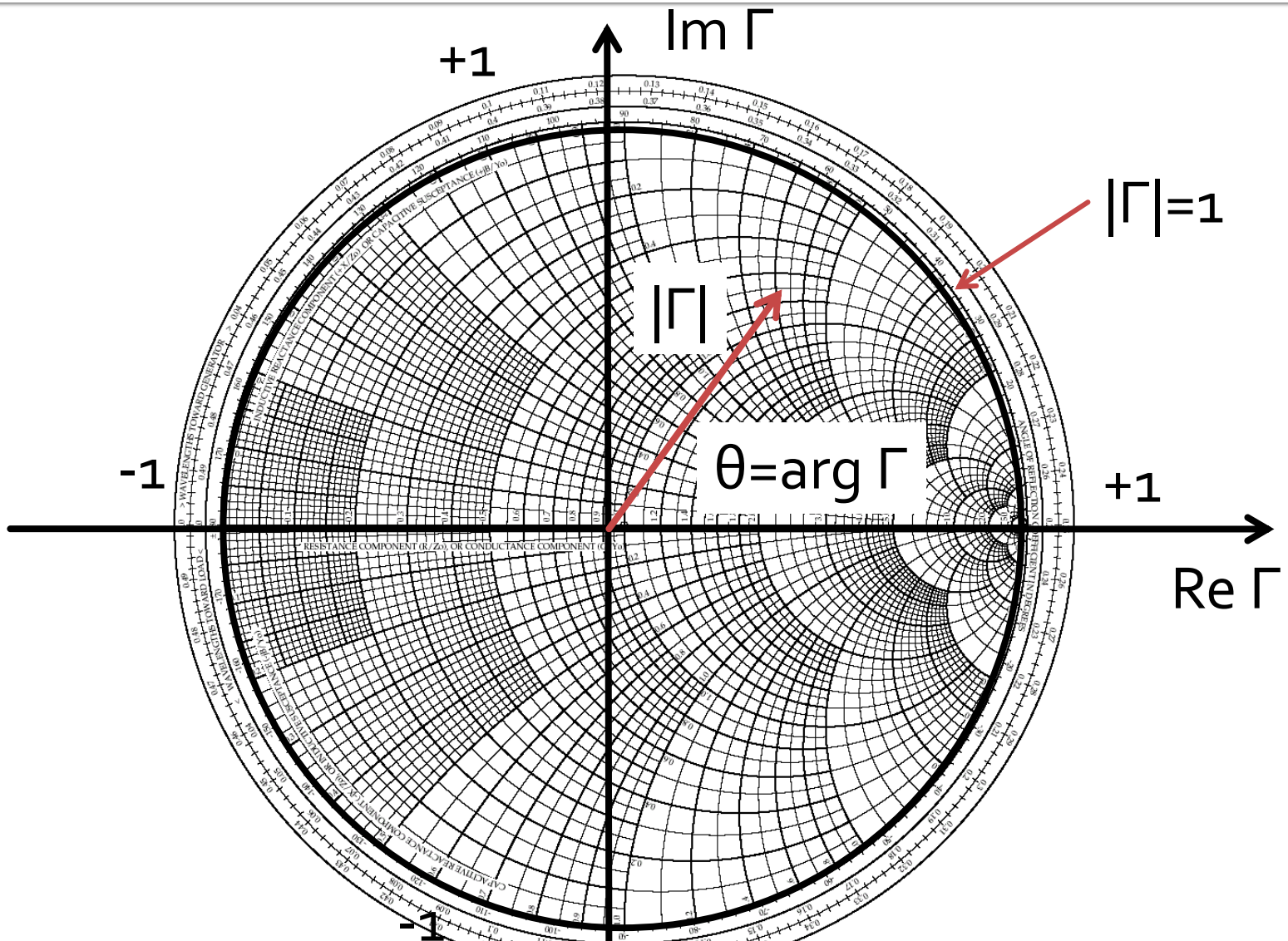

Diagrama Smith

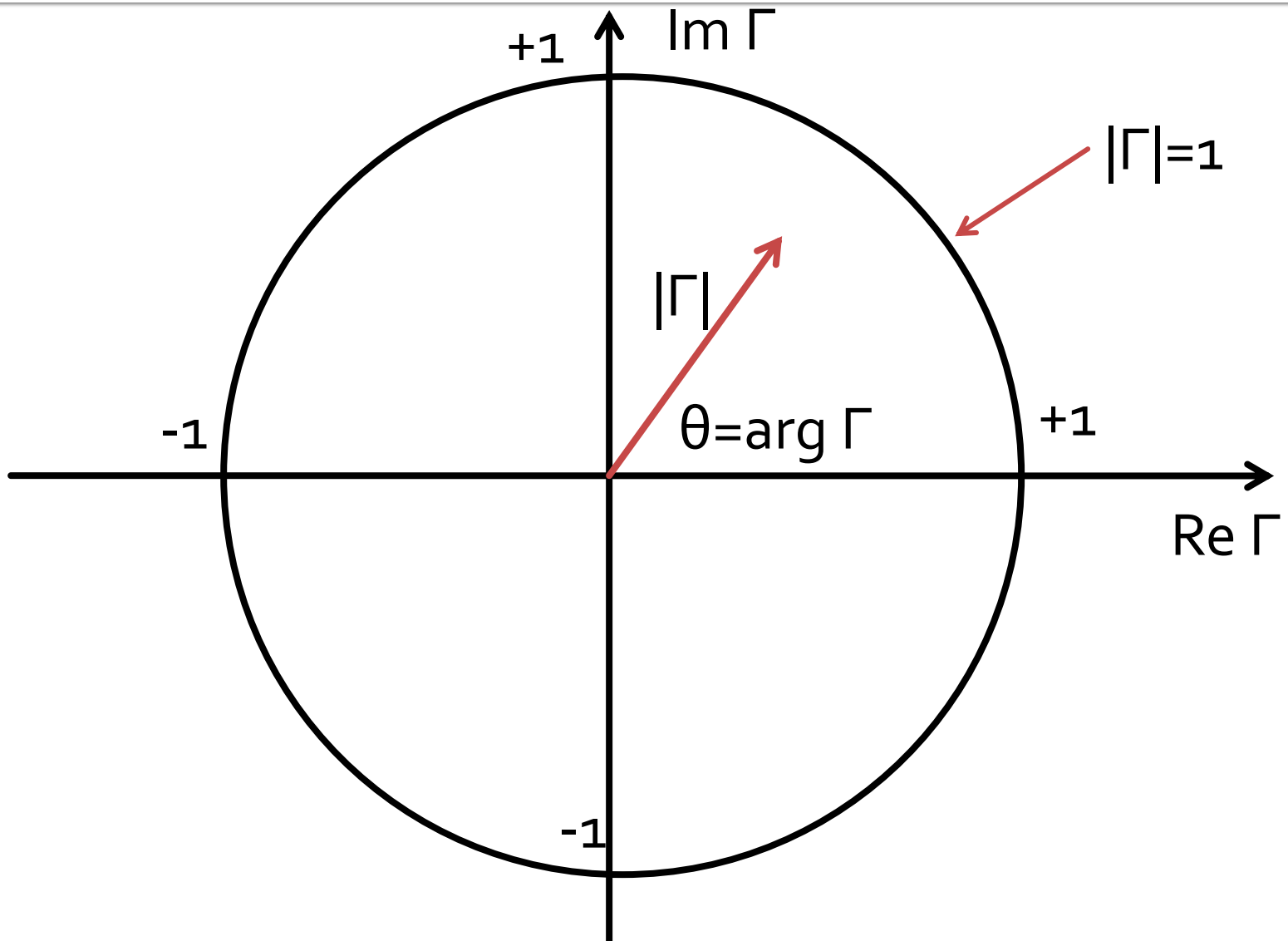

Adaptarea cu sectiuni de linii (stub)

Adaptarea de impedanța

Diagrama Smith, r=1 si g=1

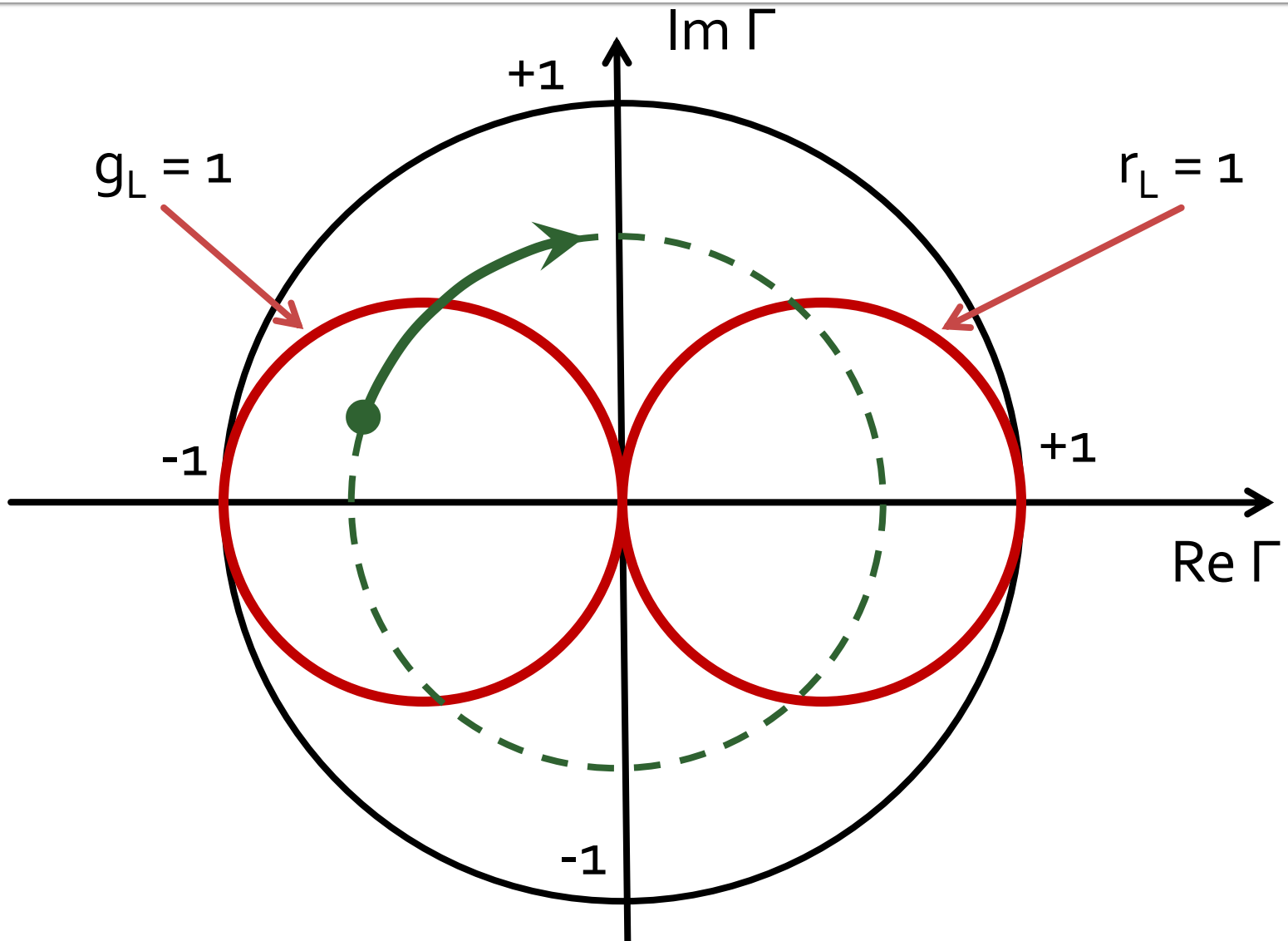

Single stub tuning

- Shunt Stub (sectiune de linie in paralel)

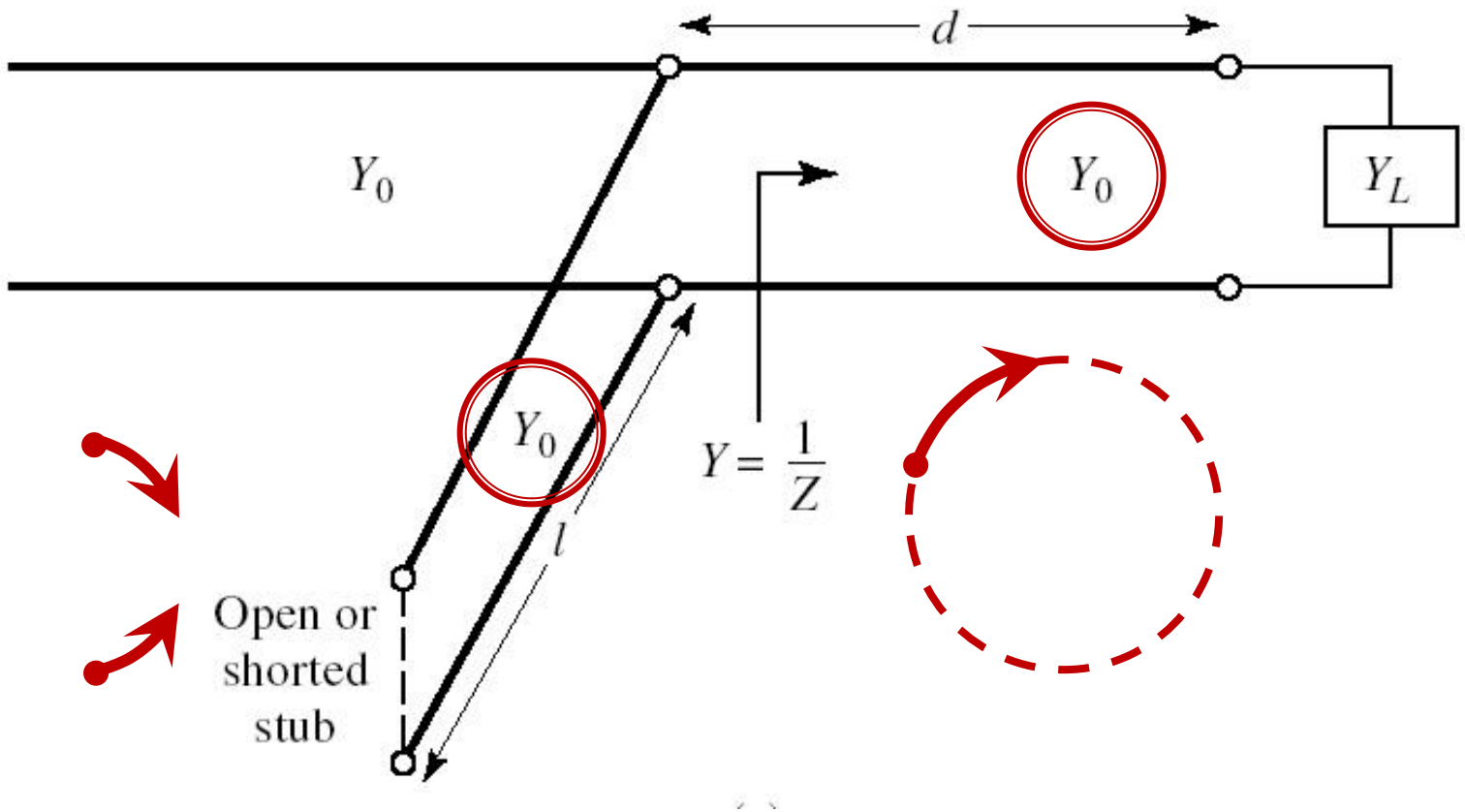

Single stub tuning

- Series Stub (sectiune de linie in serie)
- tehnologic mai dificil de realizat la liniile monofilare (microstrip)

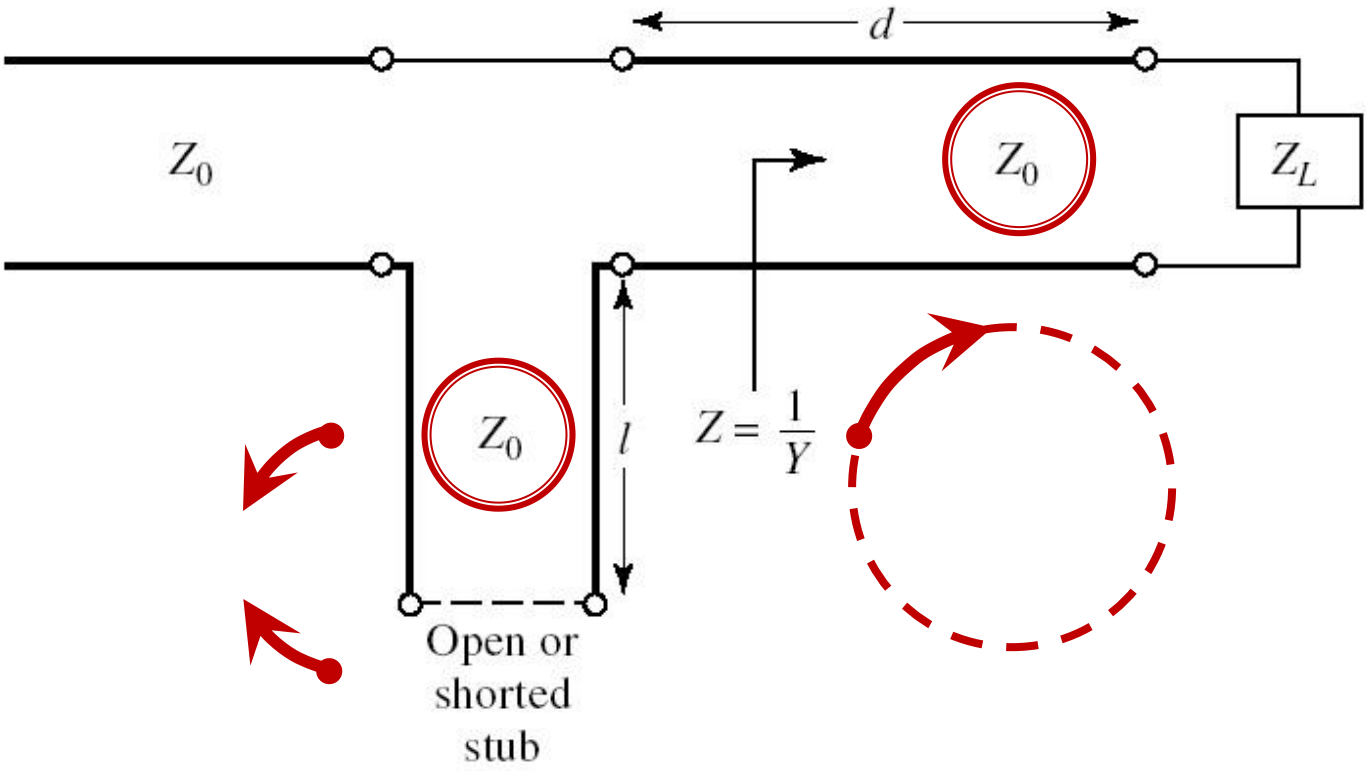

Solutii analitice

Examen / Proiect

Caz 1, Shunt Stub

- Shunt Stub (sectiune de linie in paralel)

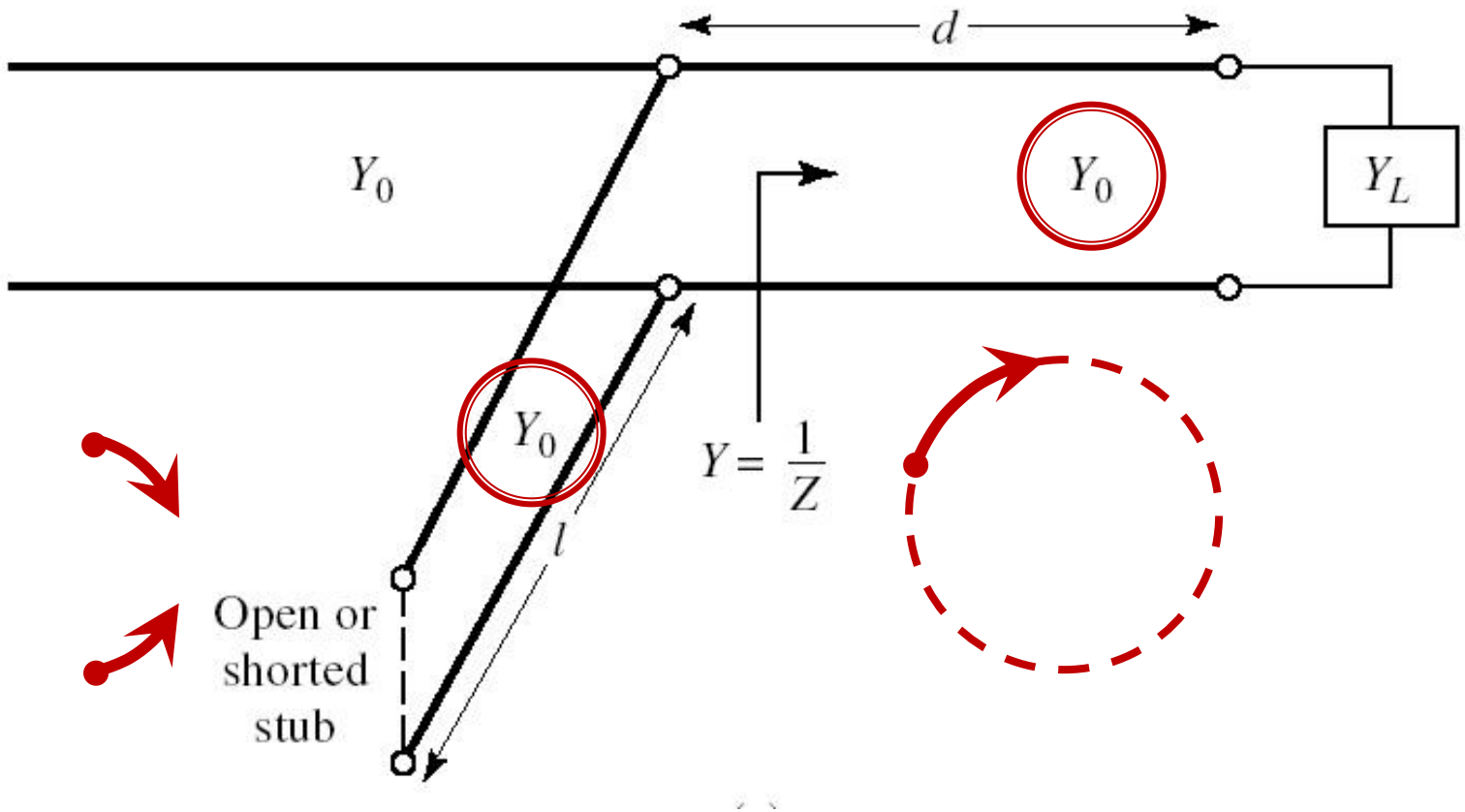

Adaptare, linie serie + susceptanta in paralel

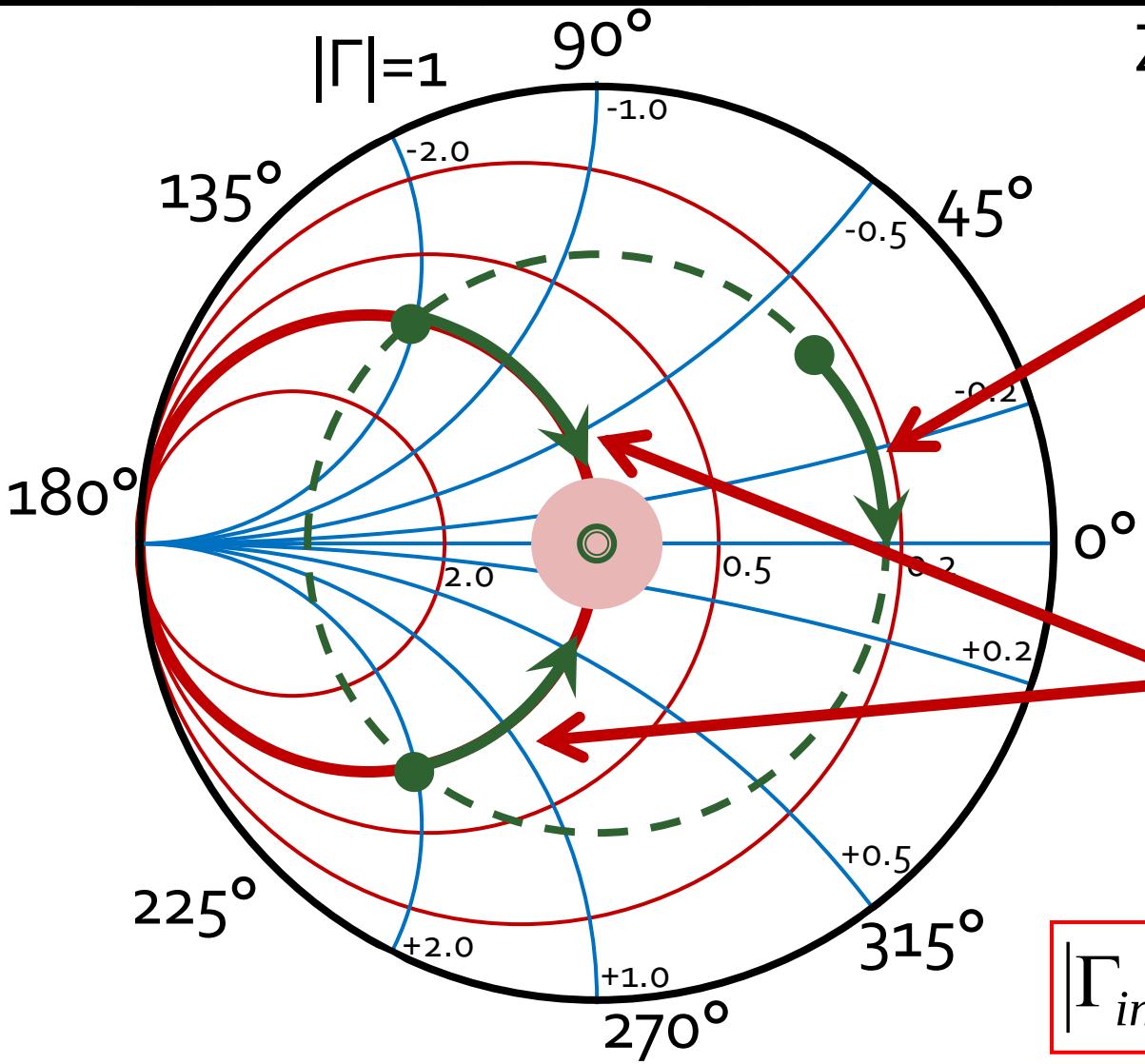

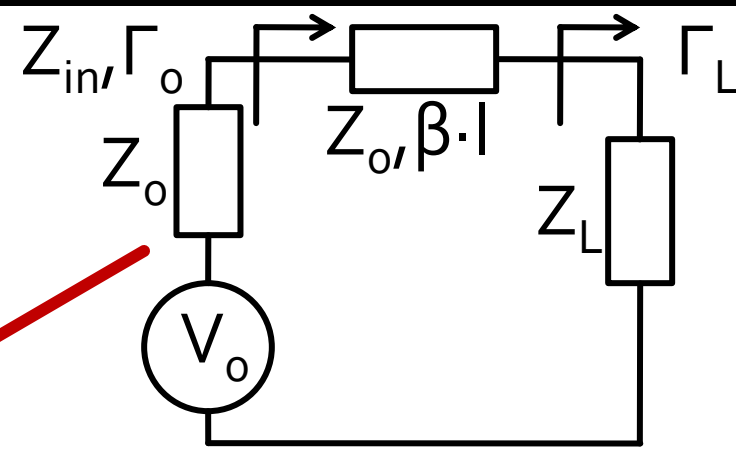

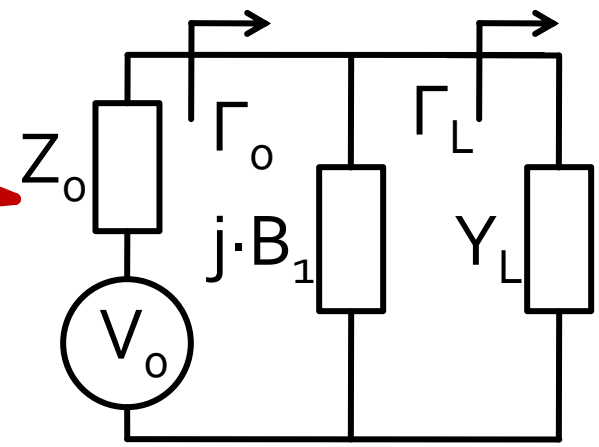

$$\boxed{|\Gamma_{in}| = |\Gamma_L|}$$

$$\boxed{g_{in} = 1}$$

Calcul analitic (calcul efectiv)

$$\boxed{\cos(\varphi + 2\theta) = -|\Gamma_S|}$$

$$\boxed{\theta_{sp} = \beta \cdot l = \tan^{-1} \frac{\mp 2 \cdot |\Gamma_S|}{\sqrt{1 - |\Gamma_S|^2}}}$$

$$\Gamma_S = 0.593 \angle 46.85°$$

$$|\Gamma_S| = 0.593; \quad \varphi = 46.85° \qquad \cos(\varphi + 2\theta) = -0.593 \Rightarrow \quad (\varphi + 2\theta) = \pm 126.35°$$

- **Semnul** (+/-) solutiei alese la ecuatia **liniei serie** impune **semnul** solutiei utilizate la ecuatia **stub-ului paralel**
  - **solutia "cu +"**

    $$(46.85° + 2\theta) = +126.35° \qquad \theta = +39.7° \qquad \operatorname{Im} y_S = \frac{-2 \cdot |\Gamma_S|}{\sqrt{1 - |\Gamma_S|^2}} = -1.472$$

    $$\theta_{sp} = \tan^{-1}(\operatorname{Im} y_S) = -55.8° \underline{(+180°)} \rightarrow \theta_{sp} = 124.2°$$

  - **solutia "cu -"**

    $$(46.85° + 2\theta) = -126.35° \qquad \theta = -86.6° \underline{(+180°)} \rightarrow \theta = 93.4°$$

    $$\operatorname{Im} y_S = \frac{+2 \cdot |\Gamma_S|}{\sqrt{1 - |\Gamma_S|^2}} = +1.472 \qquad \theta_{sp} = \tan^{-1}(\operatorname{Im} y_S) = 55.8°$$

Calcul analitic (calcul efectiv)

$$(\varphi+2\theta)=\begin{cases}+126.35^\circ\\-126.35^\circ\end{cases}\quad \theta=\begin{cases}39.7^\circ\\93.4^\circ\end{cases}\quad \mathrm{Im}[y_S(\theta)]=\begin{cases}-1.472\\+1.472\end{cases}\quad \theta_{sp}=\begin{cases}-55.8^\circ+180^\circ=124.2^\circ\\+55.8^\circ\end{cases}$$

- Se alege **una** din cele doua solutii posibile
- **Semnul** (+/-) solutiei alese la **prima** ecuatie impune **semnul** solutiei utilizate la a **doua** ecuatie

$$l_1=\frac{39.7^\circ}{360^\circ}\cdot\lambda=0.110\cdot\lambda$$

$$l_2=\frac{124.2^\circ}{360^\circ}\cdot\lambda=0.345\cdot\lambda$$

$$l_1=\frac{93.4^\circ}{360^\circ}\cdot\lambda=0.259\cdot\lambda$$

$$l_2=\frac{55.8^\circ}{360^\circ}\cdot\lambda=0.155\cdot\lambda$$

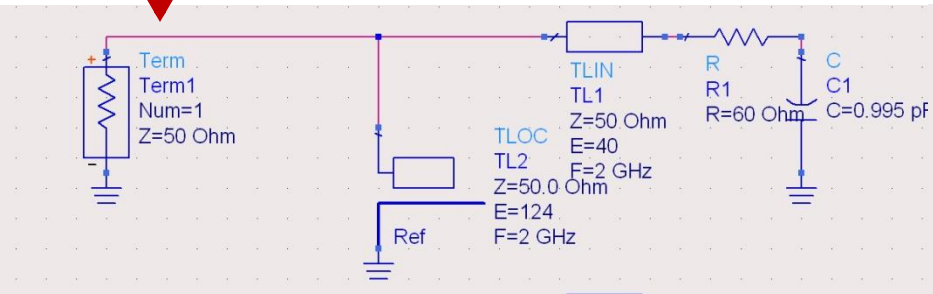

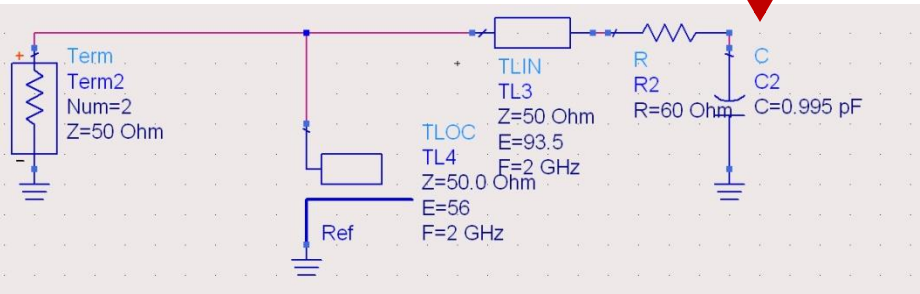

Caz 2, Series Stub

- Series Stub (sectiune de linie in serie)
- tehnologic mai dificil de realizat la liniile monofilare (microstrip)

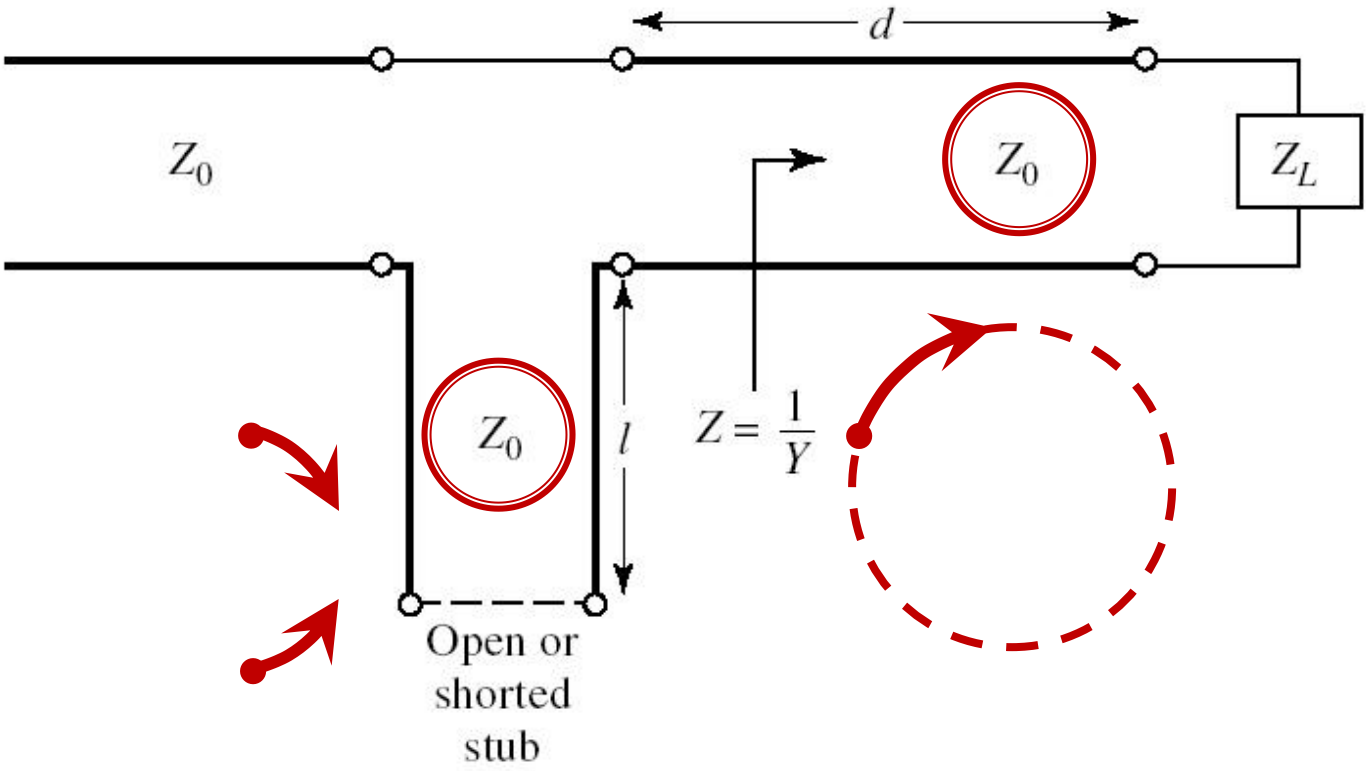

Adaptare, linie serie + reactanta in serie

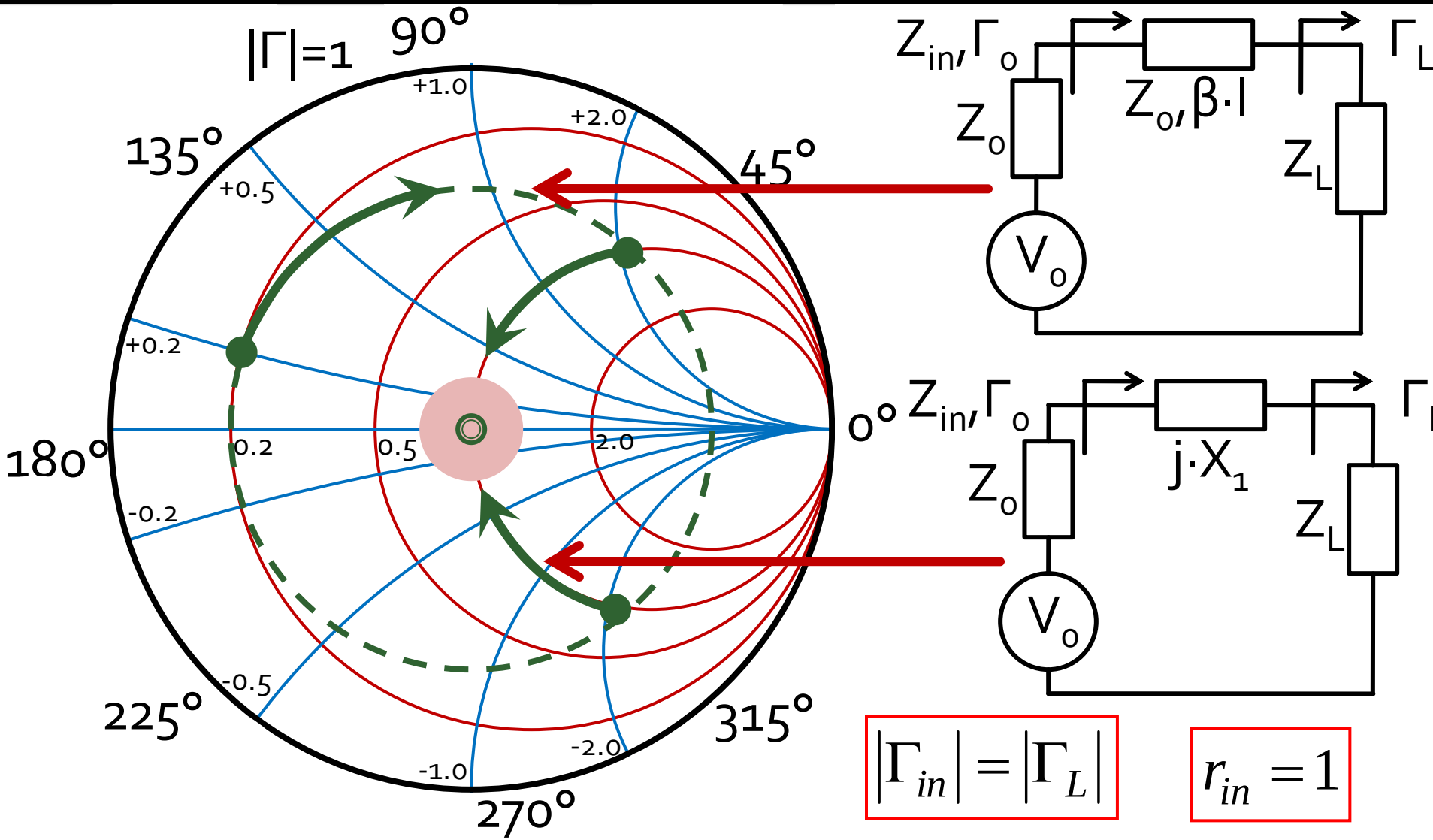

$$\boxed{|\Gamma_{in}| = |\Gamma_L|}$$

$$\boxed{r_{in} = 1}$$

Calcul analitic (calcul efectiv)

$$\boxed{\cos(\varphi + 2\theta) = |\Gamma_S|}$$

$$\boxed{\theta_{ss} = \beta \cdot l = \cot^{-1} \frac{\mp 2 \cdot |\Gamma_S|}{\sqrt{1 - |\Gamma_S|^2}}}$$

$$\Gamma_S = 0.555\angle -29.92^\circ$$

$$|\Gamma_S| = 0.555; \quad \varphi = -29.92^\circ \qquad \cos(\varphi + 2\theta) = 0.555 \Rightarrow (\varphi + 2\theta) = \pm 56.28^\circ$$

- **Semnul** (+/-) solutiei alese la ecuatia **liniei serie** impune **semnul** solutiei utilizate la ecuatia **stub-ului serie**
  - **solutia "cu +"**

$$(-29.92^\circ + 2\theta) = +56.28^\circ \qquad \theta = 43.1^\circ \qquad \operatorname{Im} z_S = \frac{+2 \cdot |\Gamma_S|}{\sqrt{1 - |\Gamma_S|^2}} = +1.335$$

$$\theta_{ss} = -\cot^{-1}(\operatorname{Im} z_S) = -36.8^\circ \underline{(+180^\circ)} \rightarrow \theta_{ss} = 143.2^\circ$$

  - **solutia "cu -"**

$$(-29.92^\circ + 2\theta) = -56.28^\circ \qquad \theta = -13.2^\circ \underline{(+180^\circ)} \rightarrow \theta = 166.8^\circ$$

$$\operatorname{Im} z_S = \frac{-2 \cdot |\Gamma_S|}{\sqrt{1 - |\Gamma_S|^2}} = -1.335 \qquad \theta_{ss} = -\cot^{-1}(\operatorname{Im} z_S) = 36.8^\circ$$

Calcul analitic (calcul efectiv)

$$(\varphi+2\theta)=\begin{cases}+56.28^\circ\\-56.28^\circ\end{cases}\quad \theta=\begin{cases}43.1^\circ\\166.8^\circ\end{cases}\quad \mathrm{Im}[z_S(\theta)]=\begin{cases}+1.335\\-1.335\end{cases}\quad \theta_{ss}=\begin{cases}-36.8^\circ+180^\circ=143.2^\circ\\+36.8^\circ\end{cases}$$

- Se alege **una** din cele doua solutii posibile
- **Semnul** (+/-) solutiei alese la **prima** ecuatie impune **semnul** solutiei utilizate la a **doua** ecuatie

$$l_1=\frac{43.1^\circ}{360^\circ}\cdot\lambda=0.120\cdot\lambda$$

$$l_2=\frac{143.2^\circ}{360^\circ}\cdot\lambda=0.398\cdot\lambda$$

$$l_1=\frac{166.8^\circ}{360^\circ}\cdot\lambda=0.463\cdot\lambda$$

$$l_2=\frac{36.8^\circ}{360^\circ}\cdot\lambda=0.102\cdot\lambda$$

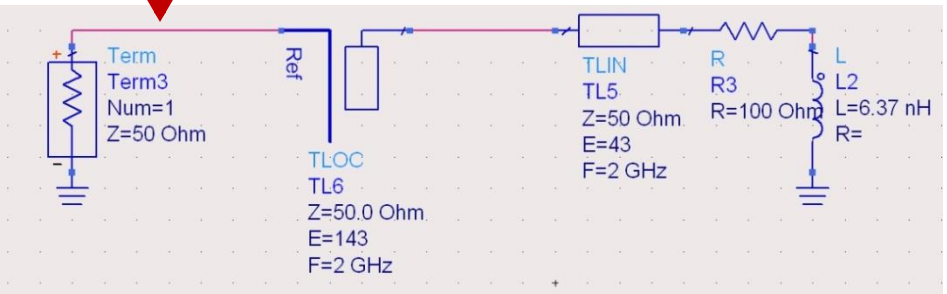

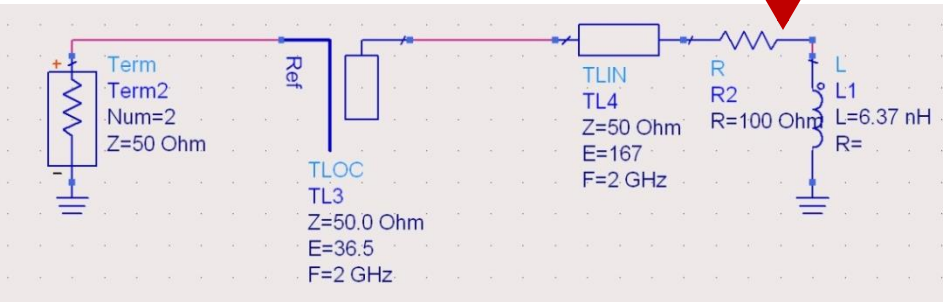

Stub, observatii

- adunarea si scadere de **180°** (λ/2) nu schimba rezultatul (rotatie completa in jurul diagramei

$$E = \beta \cdot l = \pi = 180° \qquad l = k \cdot \frac{\lambda}{2}, \forall k \in \mathbf{N}$$

  - pentru linii de "lungime" / "lungime electrica" **negative** se adauga λ/2 / 180° pentru a avea valoare pozitiva (realizabila fizic)
- o adaugare sau scadere de **90°** (λ/4) transforma impedanta stub-ului:

$$Z_{in,sc} = j \cdot Z_0 \cdot \tan \beta \cdot l \quad \Leftrightarrow \quad Z_{in,g} = -j \cdot Z_0 \cdot \cot \beta \cdot l$$

  - pentru stub se poate adauga/scadea 90° (λ/4) simultan cu schimbare **gol** ⇔ **scurtcircuit**

Amplificatoare de microunde

Cuadripol Amplificator (diport)

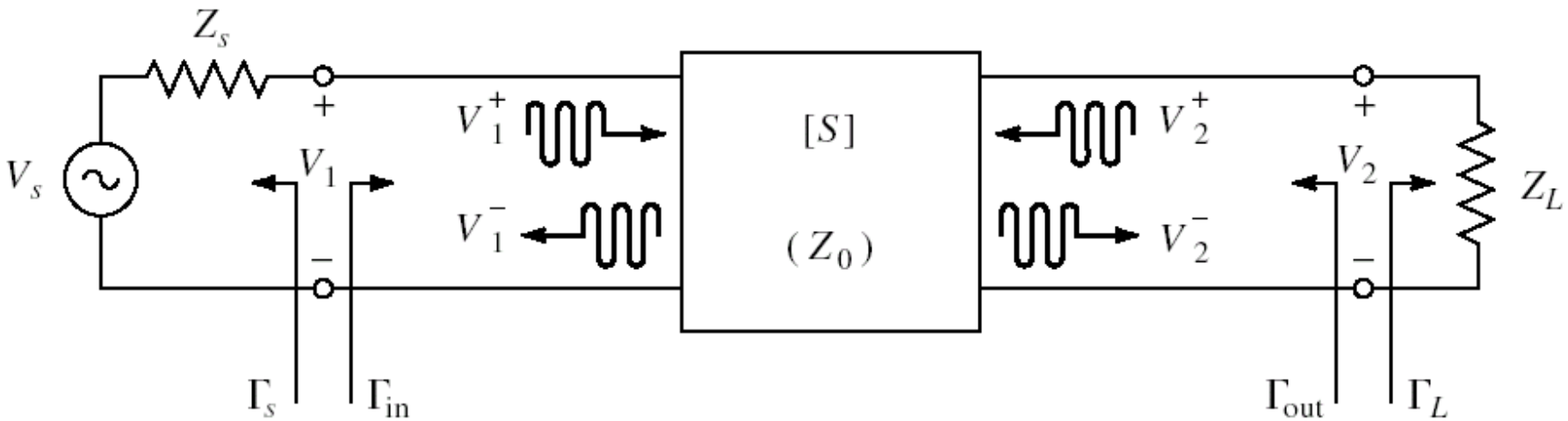

- Caracterizare cu parametri S
- Normalizati la Zo (implicit 50Ω)
- Cataloage: parametri S pentru anumite polarizari

Cataloage

NE46100

VCE = 5 V, IC = 50 mA

FREQUENCY	S_{11}		S_{21}		S_{12}		S_{22}		K	MAG^2
(MHz)	MAG	ANG	MAG	ANG	MAG	ANG	MAG	ANG		(dB)
100	0.778	-137	26.776	114	0.028	30	0.555	-102	0.16	29.8
200	0.815	-159	14.407	100	0.035	29	0.434	-135	0.36	26.2
500	0.826	-177	5.855	84	0.040	38	0.400	-162	0.75	21.7
800	0.827	176	3.682	76	0.052	43	0.402	-169	0.91	18.5
1000	0.826	173	2.963	71	0.058	47	0.405	-172	1.02	16.3
1200	0.825	170	2.441	66	0.064	47	0.412	-174	1.08	14.0
1400	0.820	167	2.111	61	0.069	47	0.413	-176	1.17	12.4
1600	0.828	165	1.863	57	0.078	54	0.426	-177	1.15	11.4
1800	0.827	162	1.671	53	0.087	50	0.432	-178	1.14	10.6
2000	0.828	159	1.484	49	0.093	50	0.431	-180	1.17	9.5
2500	0.822	153	1.218	39	0.11	48	0.462	177	1.18	7.8
3000	0.818	148	1.010	30	0.135	46	0.490	174	1.16	6.3
3500	0.824	142	0.876	21	0.147	44	0.507	170	1.16	5.3
4000	0.812	137	0.762	13	0.168	38	0.535	167	1.14	4.3

VCE = 5 V, IC = 100 mA

100	0.778	-144	27.669	111	0.027	35	0.523	-114	0.27	30.2
200	0.820	-164	14.559	97	0.029	29	0.445	-144	0.42	27.0
500	0.832	-179	5.885	84	0.035	38	0.435	-166	0.81	22.2
800	0.833	175	3.691	76	0.048	45	0.435	-173	0.95	18.8
1000	0.831	172	2.980	71	0.056	51	0.437	-176	1.05	16.0
1200	0.836	169	2.464	67	0.061	52	0.432	-178	1.11	14.0
1400	0.829	166	2.121	61	0.072	53	0.447	-180	1.12	12.6
1600	0.831	164	1.867	58	0.080	54	0.445	179	1.14	11.4

S2P - Touchstone

- Fisiere format Touchstone (*.s2p)

```
! SIEMENS Small Signal Semiconductors
! VDS = 3.5 V     ID = 15 mA
# GHz  S  MA  R  50
!  f        S11          S21          S12          S22
! GHz     MAG   ANG     MAG   ANG     MAG   ANG     MAG   ANG
 1.000 0.9800  -18.0   2.230  157.0  0.0240   74.0  0.6900  -15.0
 2.000 0.9500  -39.0   2.220  136.0  0.0450   57.0  0.6600  -30.0
 3.000 0.8900  -64.0   2.210  110.0  0.0680   40.0  0.6100  -45.0
 4.000 0.8200  -89.0   2.230   86.0  0.0850   23.0  0.5600  -62.0
 5.000 0.7400 -115.0   2.190   61.0  0.0990    7.0  0.4900  -80.0
 6.000 0.6500 -142.0   2.110   36.0  0.1070  -10.0  0.4100  -98.0
!
!  f      Fmin   Gammaopt  rn/50
! GHz      dB    MAG  ANG    -
 2.000     1.00  0.72   27   0.84
 4.000     1.40  0.64   61   0.58
```

Diport amplificator

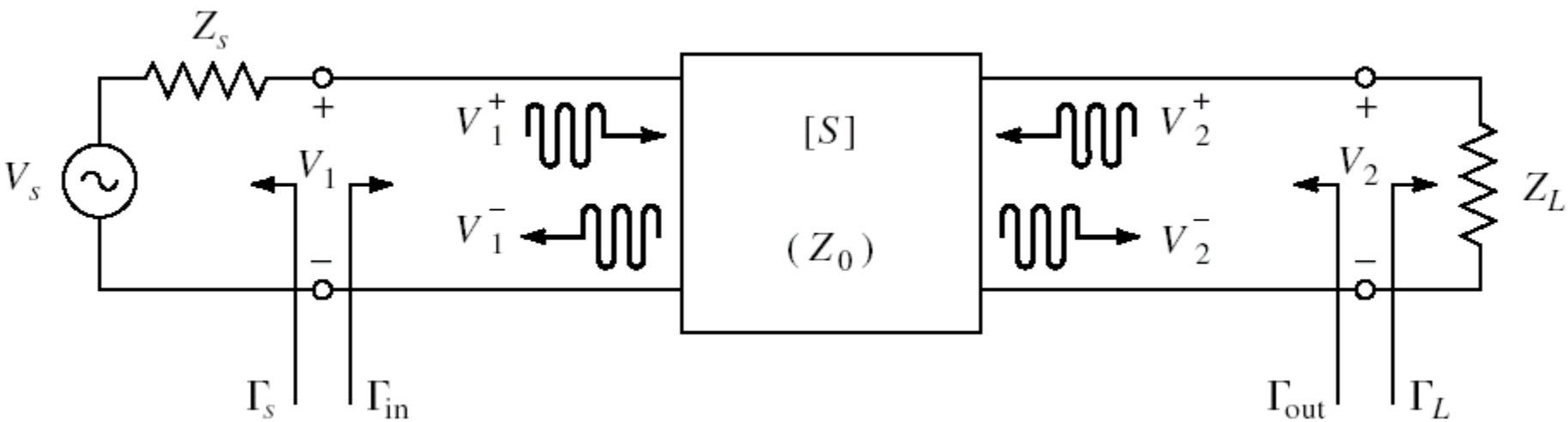

$$\Gamma_{in} = \frac{V_1^-}{V_1^+} = S_{11} + \frac{S_{12} \cdot S_{21} \cdot \Gamma_L}{1 - S_{22} \cdot \Gamma_L}$$

$$\Gamma_{out} = \frac{V_2^-}{V_2^+} = S_{22} + \frac{S_{12} \cdot S_{21} \cdot \Gamma_S}{1 - S_{11} \cdot \Gamma_S}$$

Puteri / Adaptare

- Doua porturi in care adaptarea influențează transferul de putere

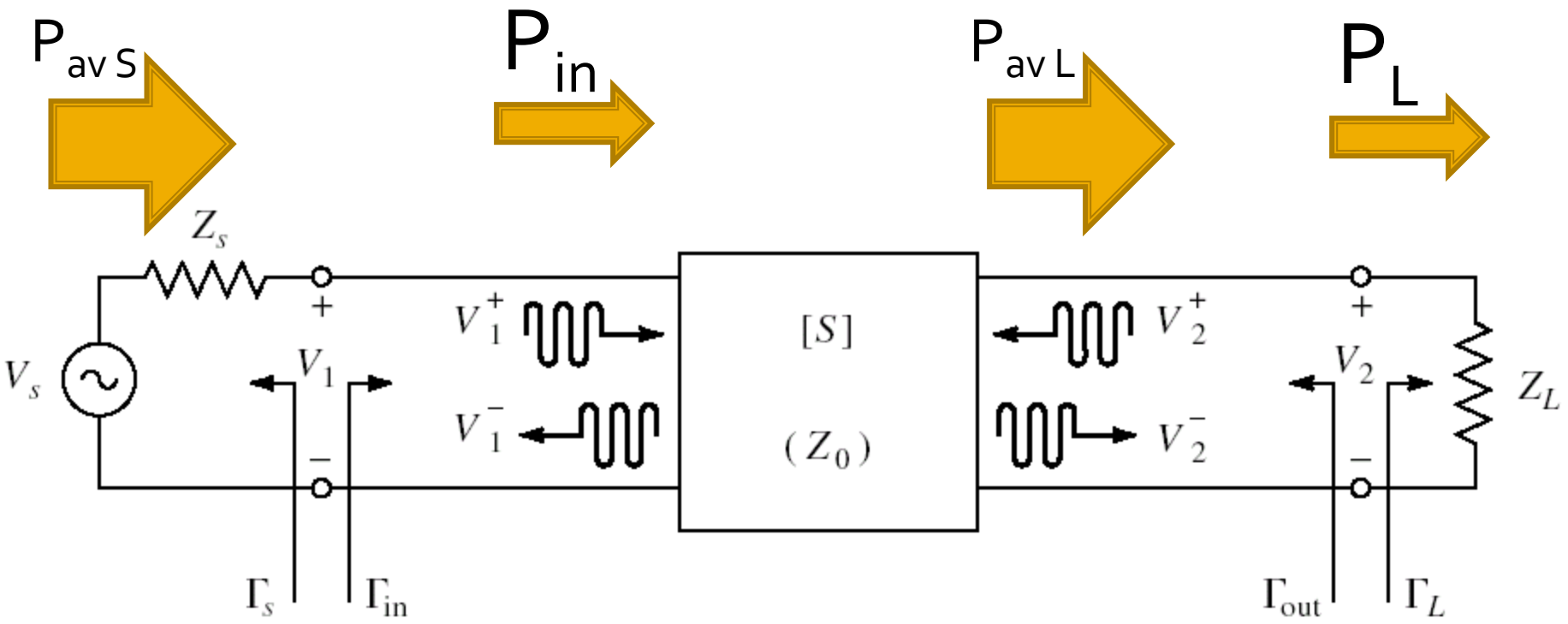

Castig de putere

- Castigul de putere de **transfer** (transducer power gain)

$$G_T = \frac{P_L}{P_{av\,S}} = \frac{|S_{21}|^2 \cdot \left(1-|\Gamma_S|^2\right)\cdot\left(1-|\Gamma_L|^2\right)}{|1-\Gamma_S \cdot \Gamma_{in}|^2 \cdot |1-S_{22}\cdot\Gamma_L|^2}$$

$$\Gamma_{in} = \Gamma_{in}(\Gamma_L)$$

- Castigul de putere de **transfer unilateral**

$$G_{TU} = |S_{21}|^2 \cdot \frac{1-|\Gamma_S|^2}{|1-S_{11}\cdot\Gamma_S|^2} \cdot \frac{1-|\Gamma_L|^2}{|1-S_{22}\cdot\Gamma_L|^2}$$

$$S_{12} \cong 0 \qquad \Gamma_{in} = S_{11}$$

Permite tratarea separata a intrarii si iesirii

Cuadripol Amplificator

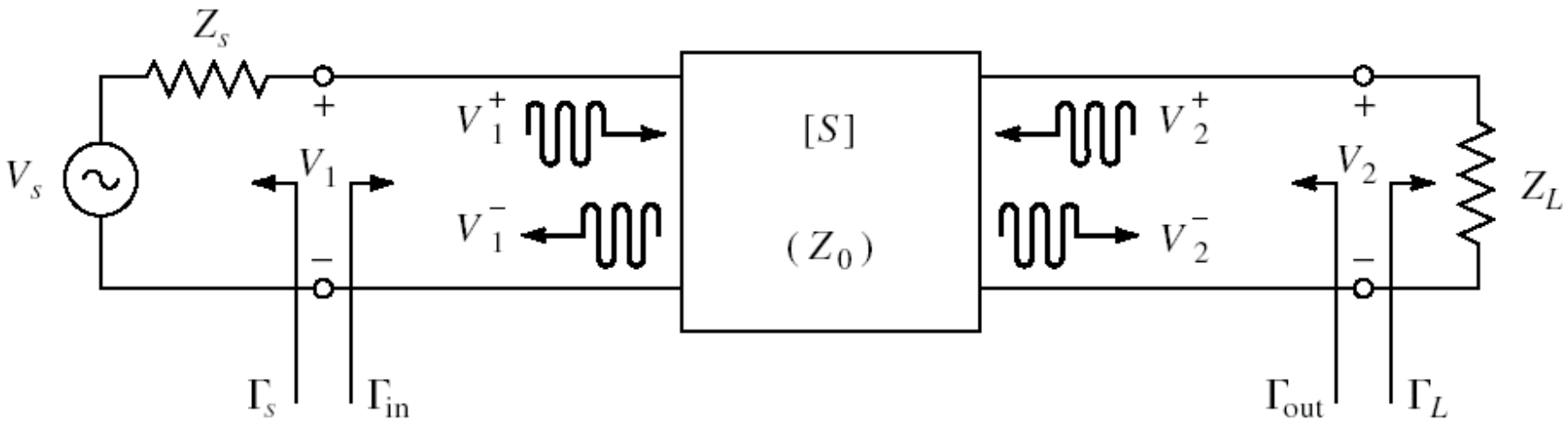

- marimi care intereseaza:
  - stabilitate
  - castig de putere
  - zgomot (uneori – semnal mic)
  - liniaritate (uneori – semnal mare)

Amplificatoare de microunde

Stabilitate

Cuadripol Amplificator

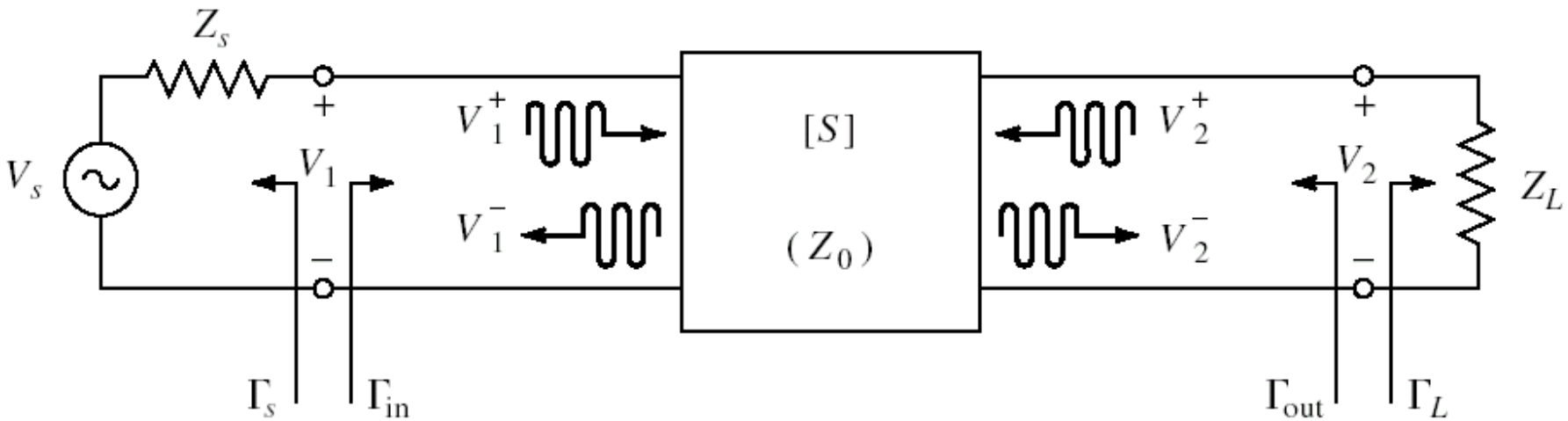

- marimi care intereseaza:
  - **stabilitate**
  - castig de putere
  - zgomot (uneori – semnal mic)
  - liniaritate (uneori – semnal mare)

Stabilitate

- C7 $\Gamma = \Gamma_r + j \cdot \Gamma_i$ $r_L = \dfrac{1-\Gamma_r^2-\Gamma_i^2}{(1-\Gamma_r)^2+\Gamma_i^2}$

  Z_{in} $\Gamma_{in} = \Gamma_r + j \cdot \Gamma_i$

- instabilitate

  $\mathrm{Re}\{Z_{in}\} < 0 \quad \Leftrightarrow \quad 1-\Gamma_r^2-\Gamma_i^2 < 0$ $|\Gamma_{in}| > 1$

- stabilitate, Z_{in}
  - conditii ce trebuie indeplinite de Γ_L pentru a obtine stabilitatea (la intrare)

  $|\Gamma_{in}| < 1$ $\left| S_{11} + \dfrac{S_{12} \cdot S_{21} \cdot \Gamma_L}{1 - S_{22} \cdot \Gamma_L} \right| < 1$

- similar Z_{out}
  - conditii ce trebuie indeplinite de Γ_S pentru a obtine stabilitatea (la iesire)

Stabilitate

$$\left|\Gamma_L - \frac{\left(S_{22} - \Delta \cdot S_{11}^*\right)^*}{\left|S_{22}\right|^2 - \left|\Delta\right|^2}\right| = \left|\frac{S_{12} \cdot S_{21}}{\left|S_{22}\right|^2 - \left|\Delta\right|^2}\right|$$

$$\left(x - x_0\right)^2 + \left(y - y_0\right)^2 = R^2$$

$$\left|\Gamma - \Gamma_0\right| = R$$

$$\boxed{\left|\Gamma - \Gamma_0\right| = R}$$

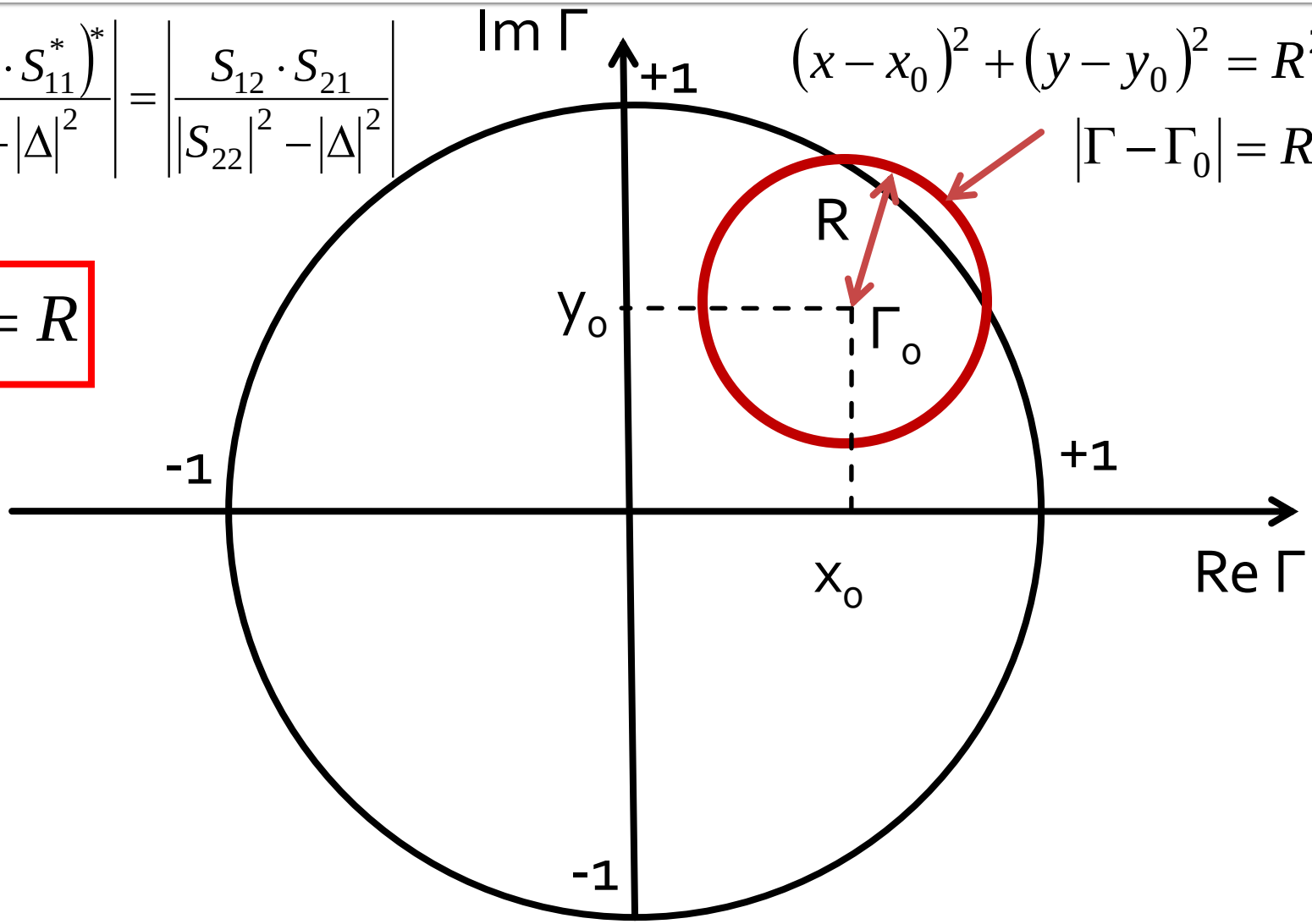

Cerc de stabilitate la iesire (CSOUT)

$$\left|\Gamma_L - \frac{\left(S_{22} - \Delta \cdot S_{11}^*\right)^*}{|S_{22}|^2 - |\Delta|^2}\right| = \left|\frac{S_{12} \cdot S_{21}}{|S_{22}|^2 - |\Delta|^2}\right| \qquad |\Gamma_L - C_L| = R_L$$

- Ecuatia unui cerc, care reprezinta locul geometric al punctelor Γ_L pentru **limita** de stabilitate
- Cercul se numeste **cerc de stabilitate la iesire** (Γ_L)

$$C_L = \frac{\left(S_{22} - \Delta \cdot S_{11}^*\right)^*}{|S_{22}|^2 - |\Delta|^2} \qquad R_L = \frac{|S_{12} \cdot S_{21}|}{\left||S_{22}|^2 - |\Delta|^2\right|}$$

Reprezentare 3D $|\Gamma_{in}|$, $|\Gamma_{out}|$, $|\Gamma|=1$

- $|\Gamma| = 1 \rightarrow \log_{10}|\Gamma| = 0$, intersectia = cerc

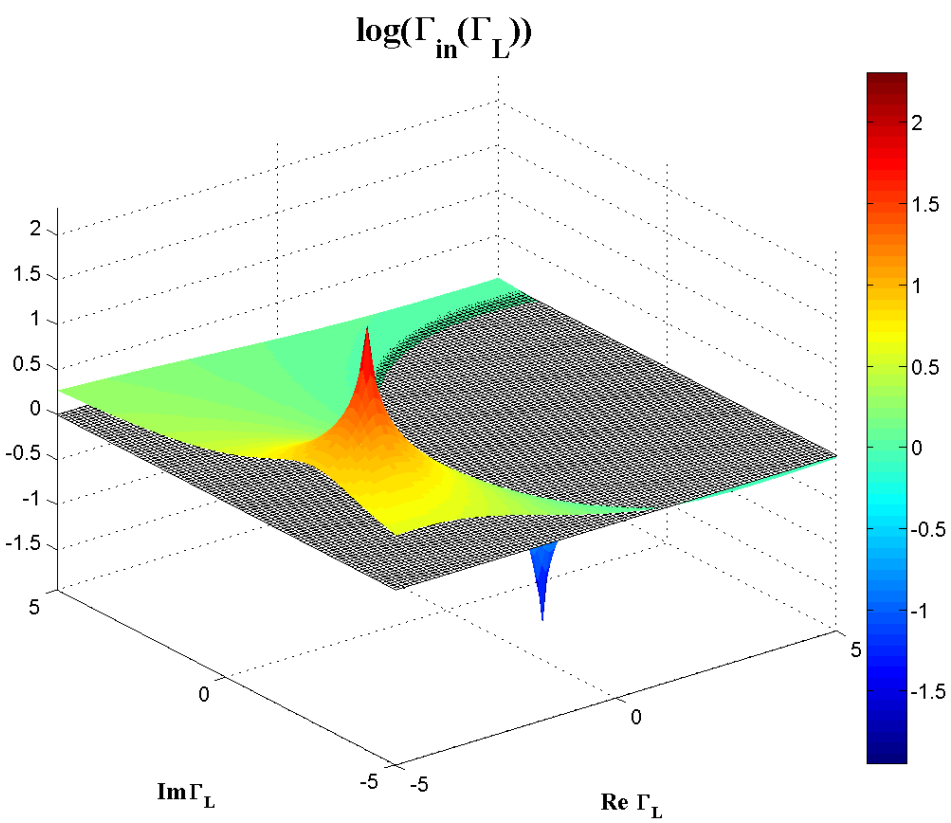

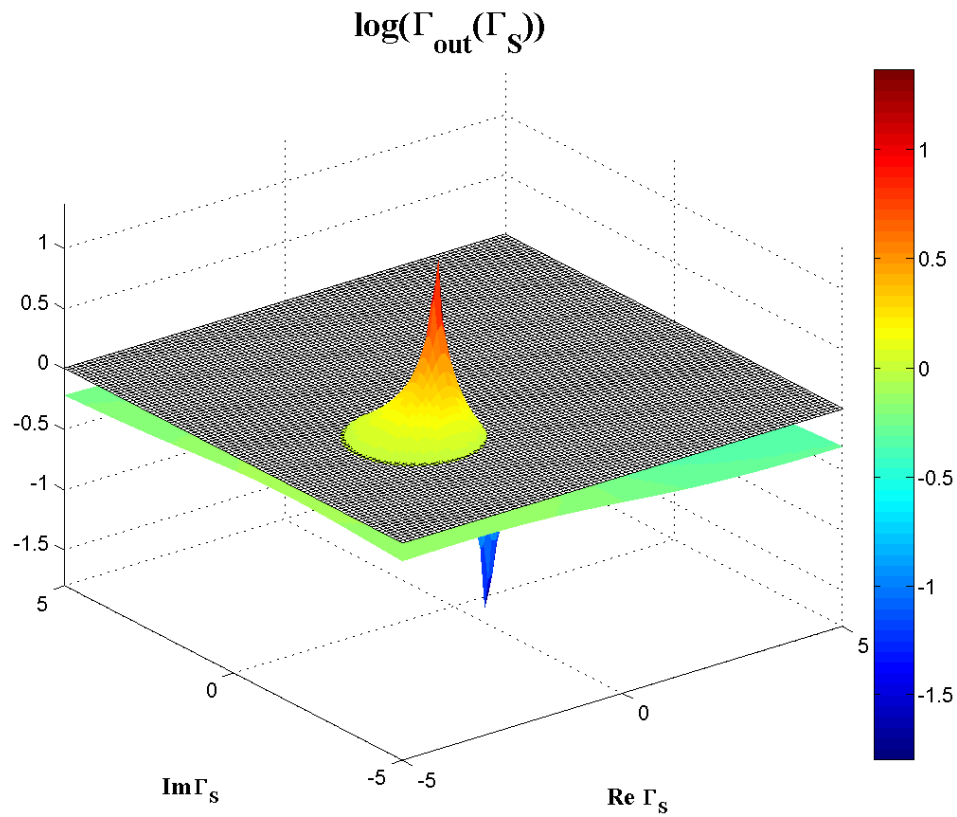

Contour map/lines

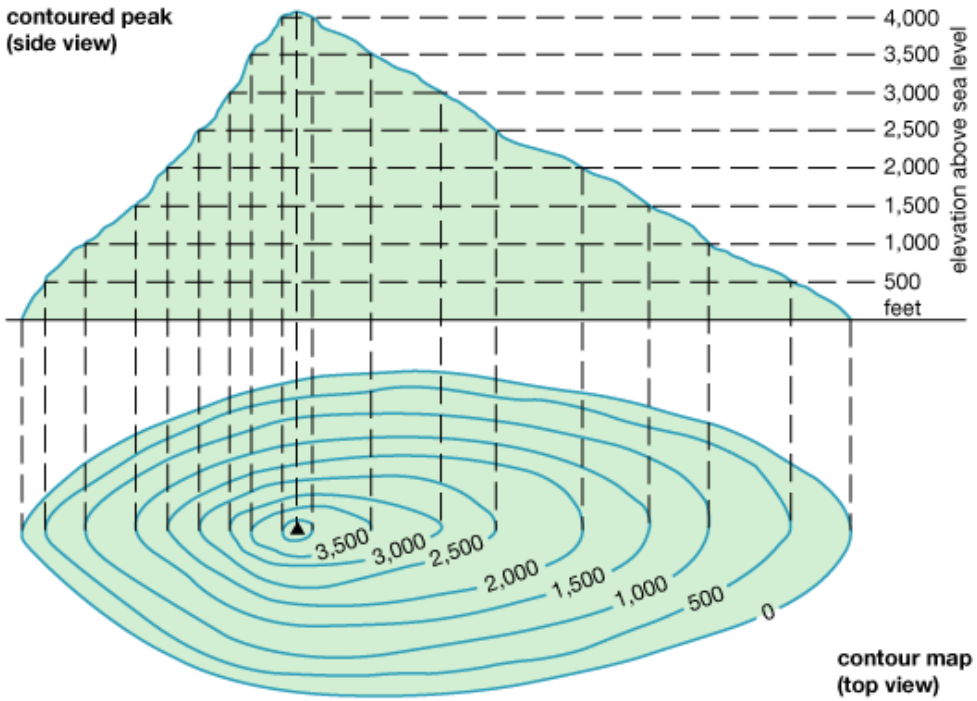

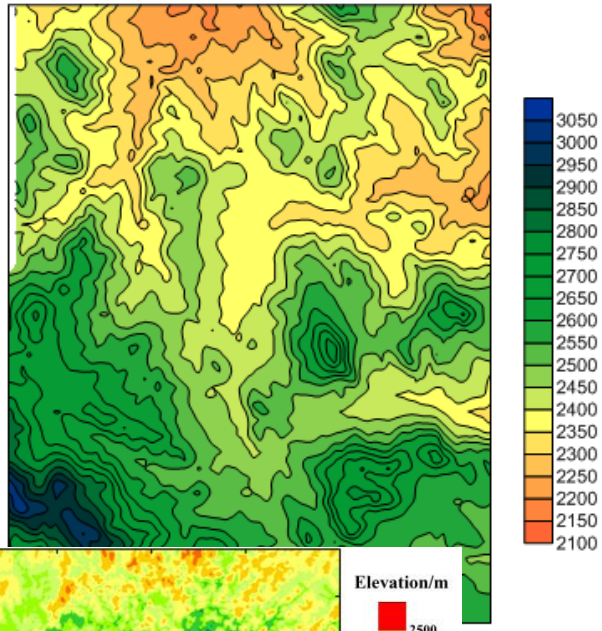

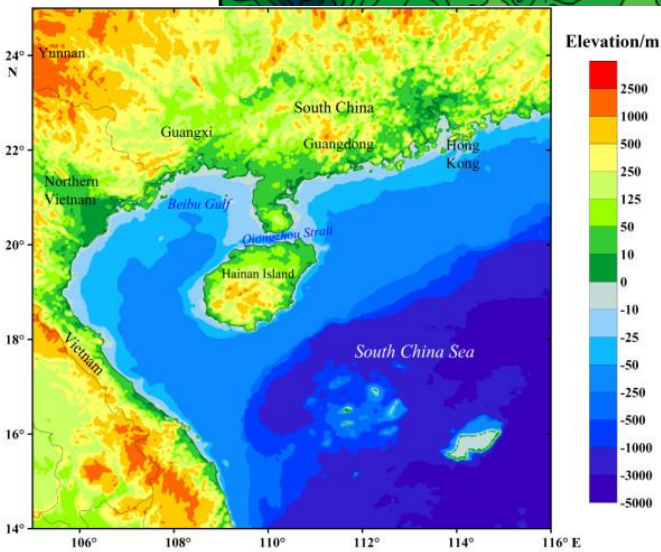

CSIN, CSOUT

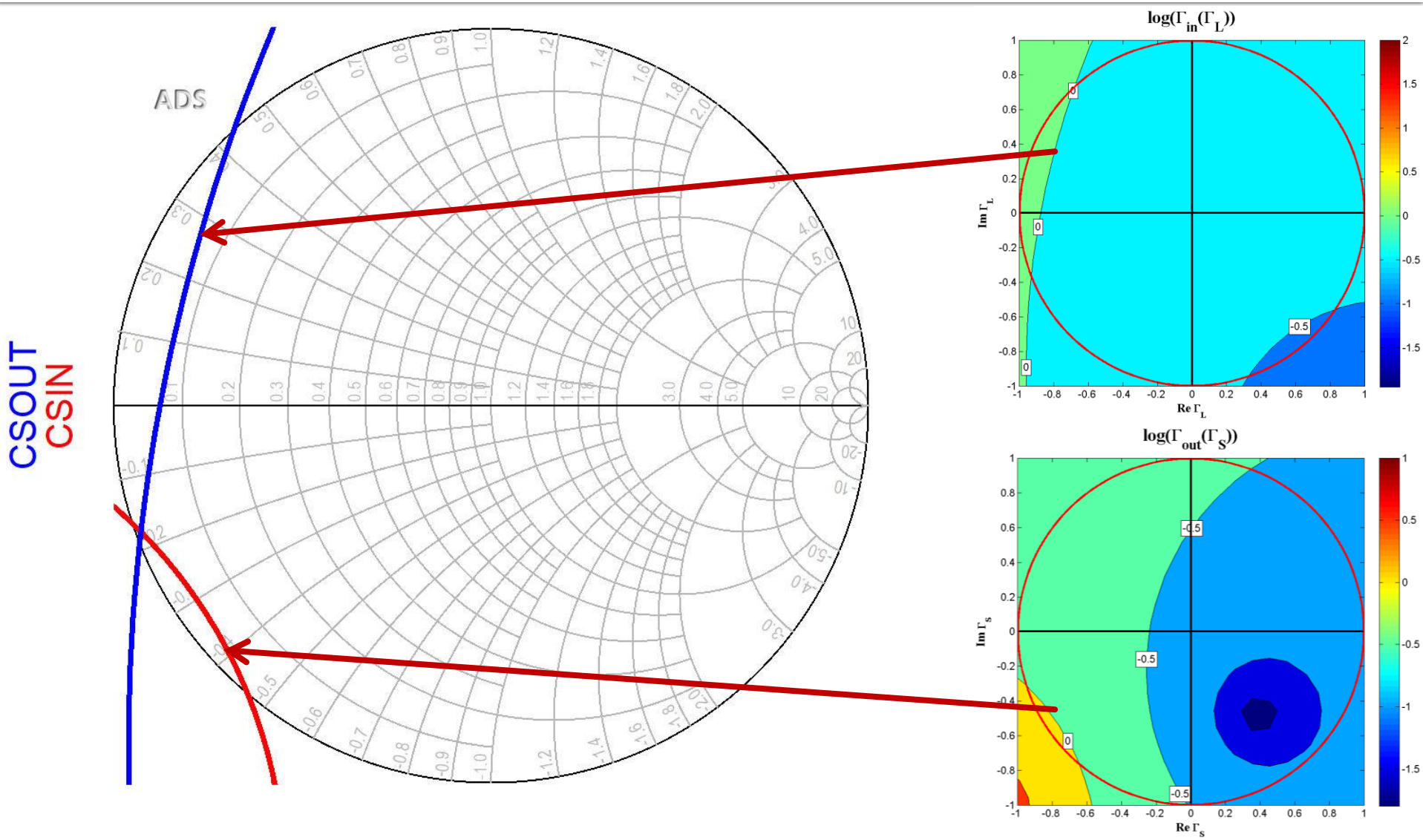

Mai multe pozitionari posibile

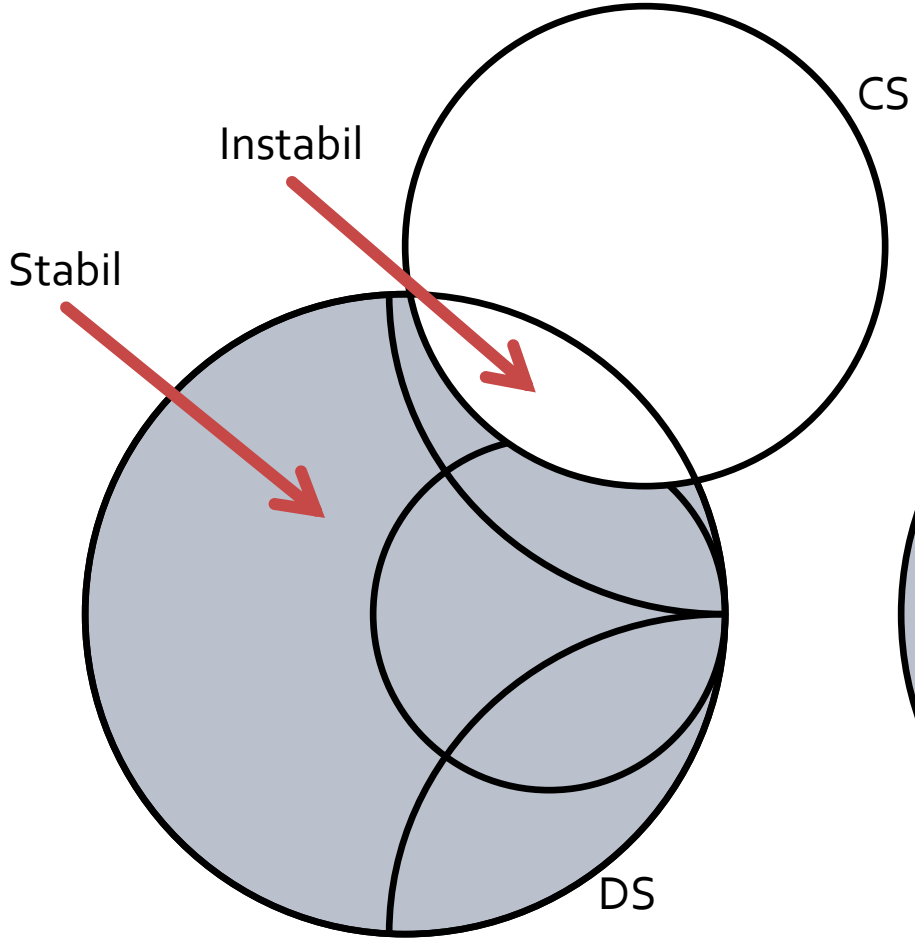

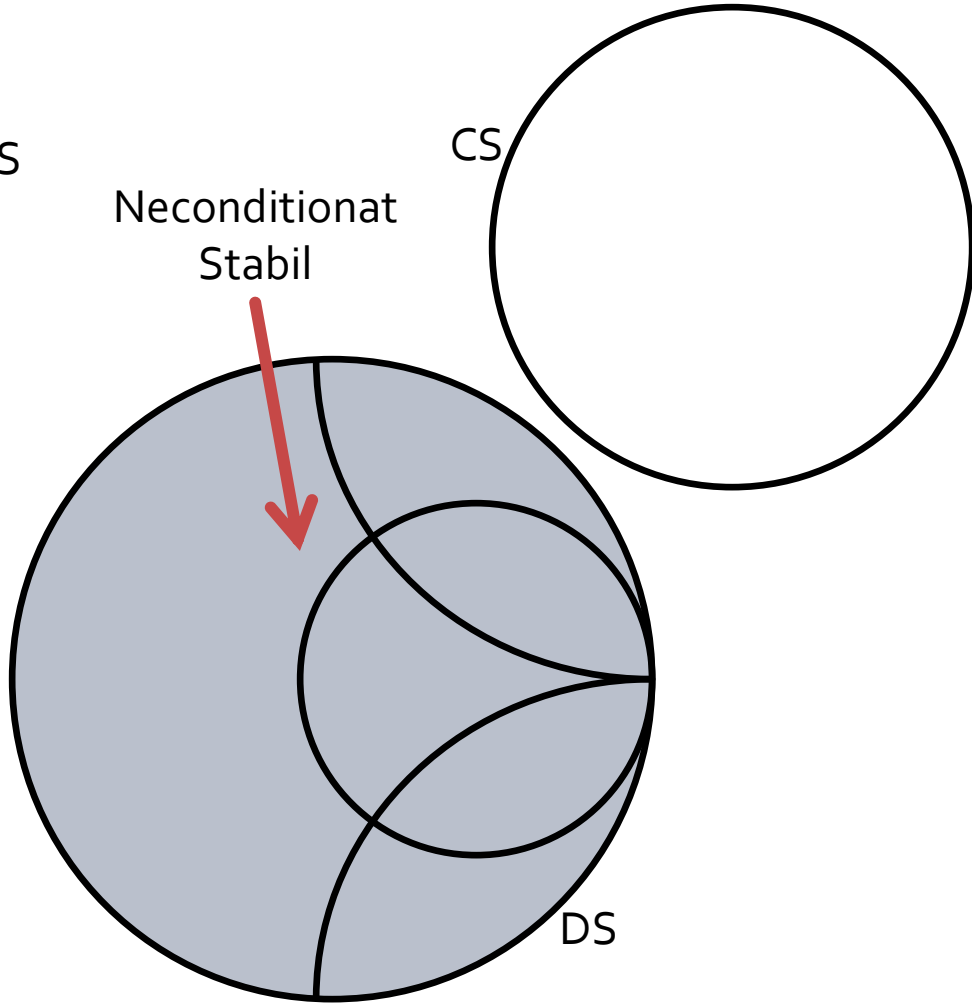

Mai multe pozitionari posibile

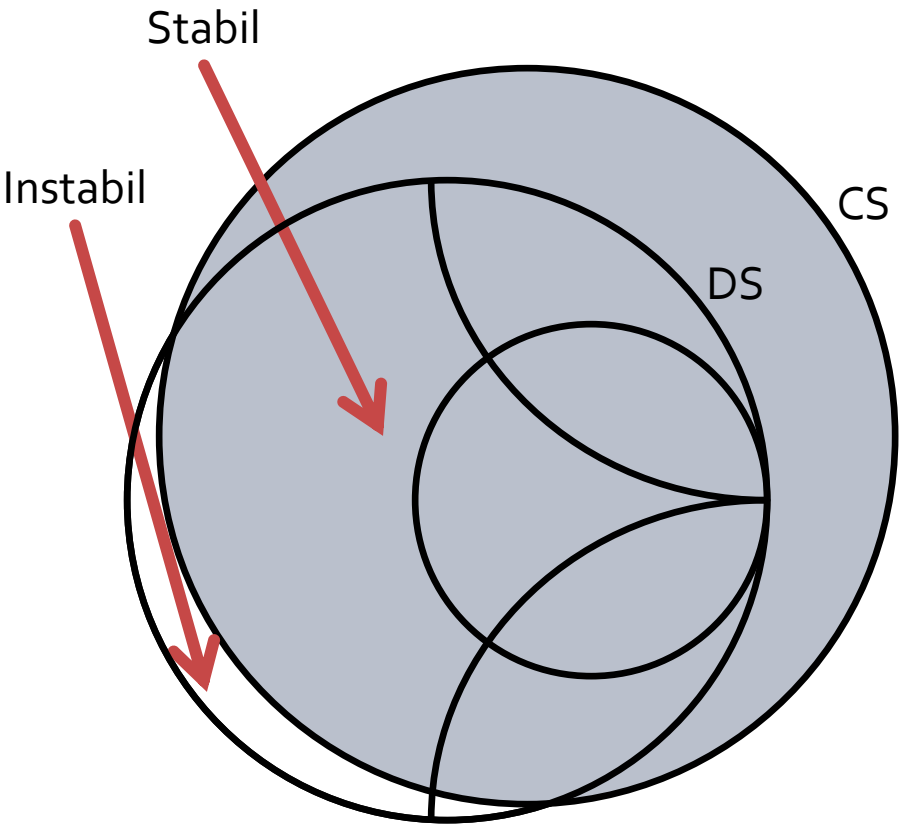

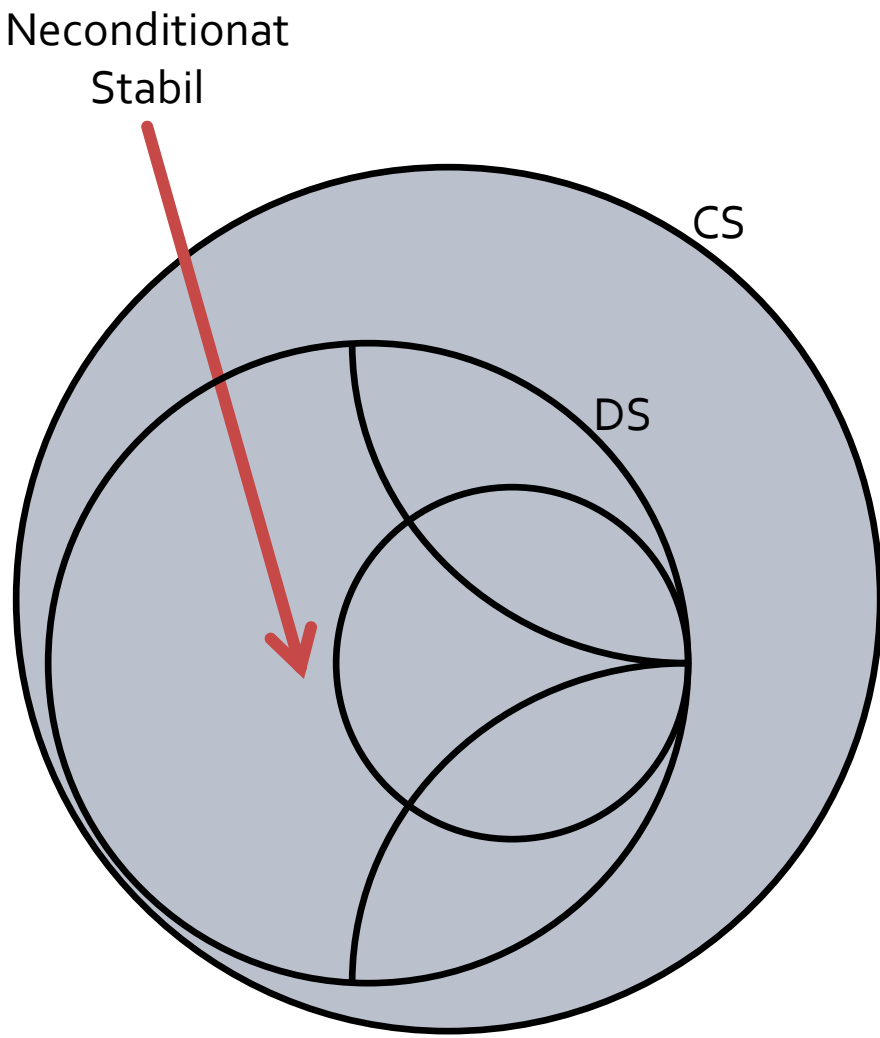

Pozitionari mai rare

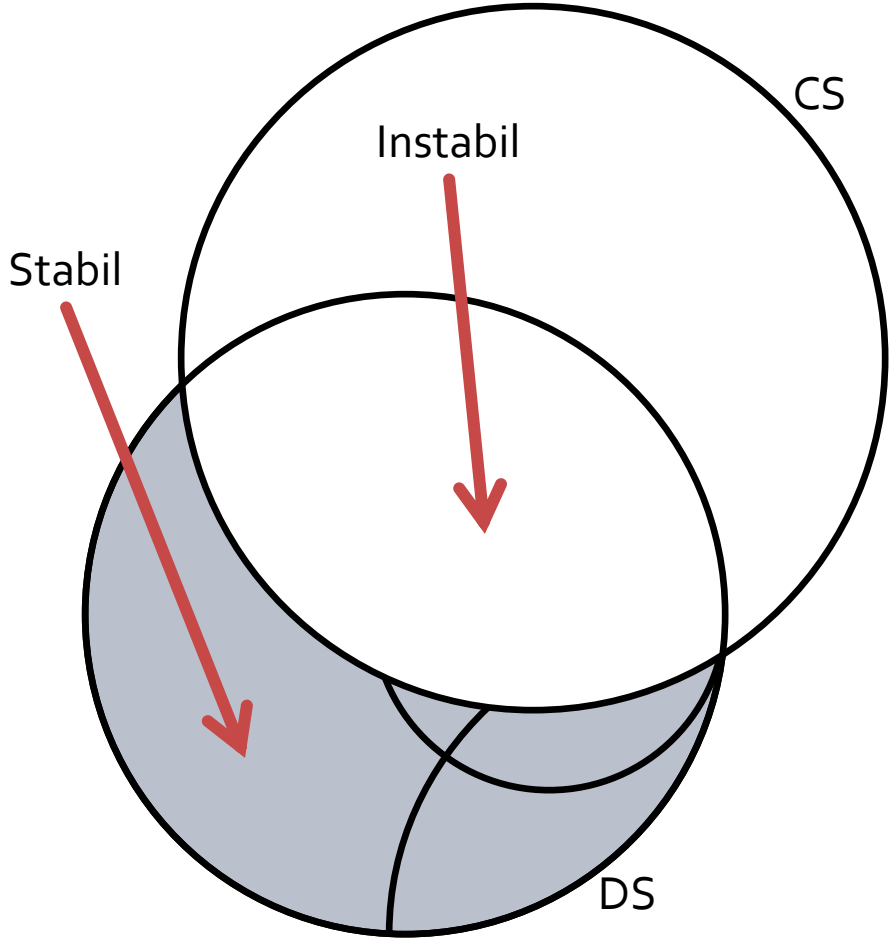

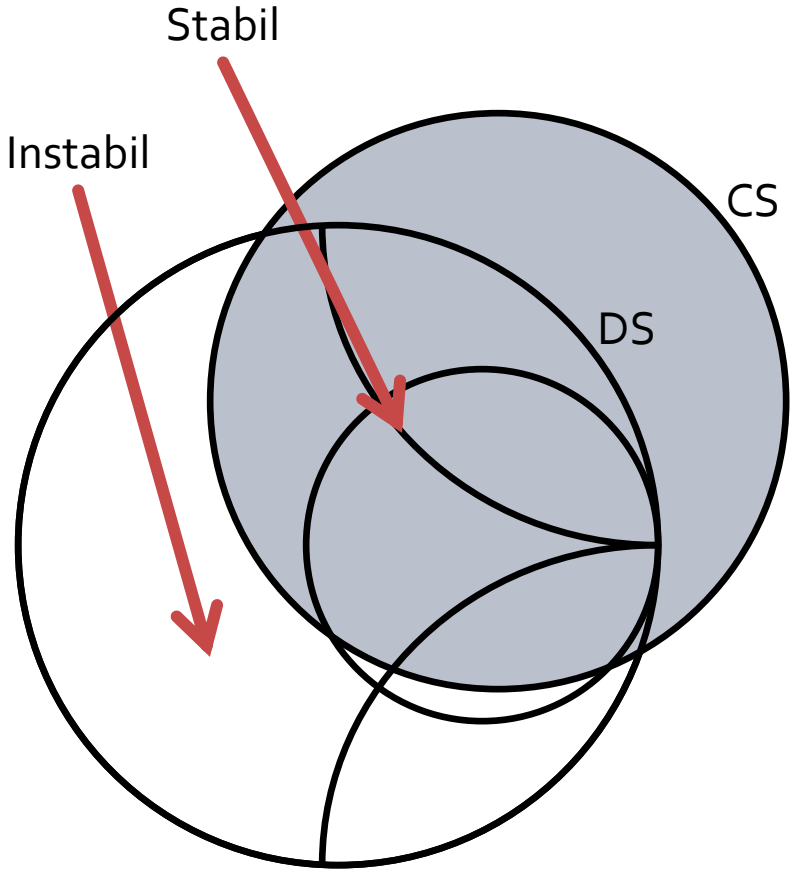

Stabilitate

- **Stabilitatea necondiționată:** circuitul este necondiționat stabil dacă $|\Gamma_{in}|<1$ şi $|\Gamma_{out}|<1$ pentru **orice** impedanță pasivă a sarcinii şi sursei
- **Stabilitatea condiționată:** circuitul este condiționat stabil dacă $|\Gamma_{in}|<1$ şi $|\Gamma_{out}|<1$ doar pentru un anumit interval de valori pentru impedanța pasivă a sarcinii şi sursei

Conditii analitice de stabilitate neconditionata

- Utile pentru analiza de banda larga
- Stabilitatea nu e suficient sa fie apreciata doar la frecventele de lucru
  - e necesar sa avem stabilitate pentru Γ_L si Γ_S alese la **orice** frecventa

Cercuri in banda larga

CSIN

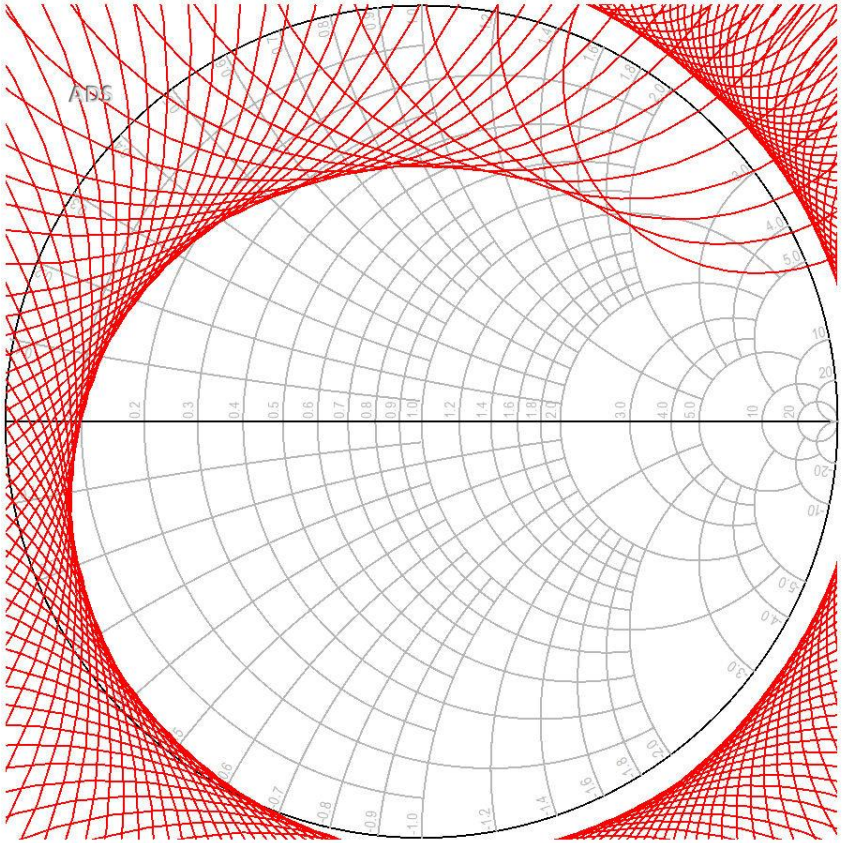

CSOUT

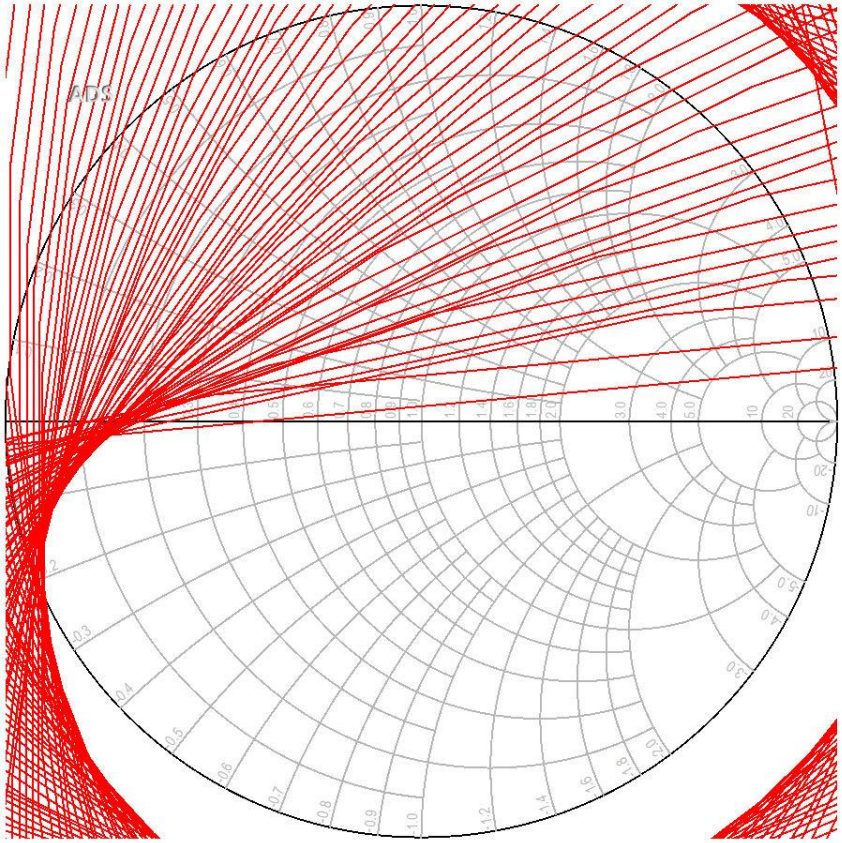

Conditia Rollet

$$K = \frac{1 - |S_{11}|^2 - |S_{22}|^2 + |\Delta|^2}{2 \cdot |S_{12} \cdot S_{21}|} \qquad \Delta = S_{11} \cdot S_{22} - S_{12} \cdot S_{21}$$

- Diportul este **neconditionat stabil** daca:
- Sunt indeplinite simultan conditiile
  - K > 1
  - |Δ| < 1
- Sunt valabile si conditiile implicite
  - |S11| < 1
  - |S22| < 1

$$K = \frac{1 - |S_{11}|^2 - |S_{22}|^2 + |\Delta|^2}{2 \cdot |S_{12} \cdot S_{21}|} > 1 \qquad |\Delta| = |S_{11} \cdot S_{22} - S_{12} \cdot S_{21}| < 1$$

Criteriul μ

- Conditia Rollet depinde de doi parametri, K si Δ, si nu poate fi utilizata pentru compararea stabilitatii a doua scheme

$$\mu = \frac{1-|S_{11}|^2}{|S_{22}-\Delta\cdot S_{11}^*|+|S_{12}\cdot S_{21}|} > 1$$

- Diportul este **neconditionat stabil** daca:
  - μ > 1
- Sunt valabile si conditiile implicite
  - |S11| < 1
  - |S22| < 1
- In plus se poate spune ca daca μ creste se obtine stabilitate mai buna
  - μ este distanta de la centrul diagramei Smith la cercul de stabilitate la iesire

Criteriul μ'

- Parametru dual pentru μ, determinat relativ la cercul de stabilitate la intrare

$$\mu' = \frac{1 - |S_{22}|^2}{|S_{11} - \Delta \cdot S_{22}^*| + |S_{12} \cdot S_{21}|} > 1$$

- Diportul este **neconditionat stabil** daca:
  - μ' > 1
- Sunt valabile si conditiile implicite
  - |S11| < 1
  - |S22| < 1
- In plus se poate spune ca daca μ' creste se obtine stabilitate mai buna
  - μ' este distanta de la centrul diagramei Smith la cercul de stabilitate la intrare

Conditia Rollet

- ATF-34143 **at Vds=3V Id=20mA**.
- @0.5÷18GHz

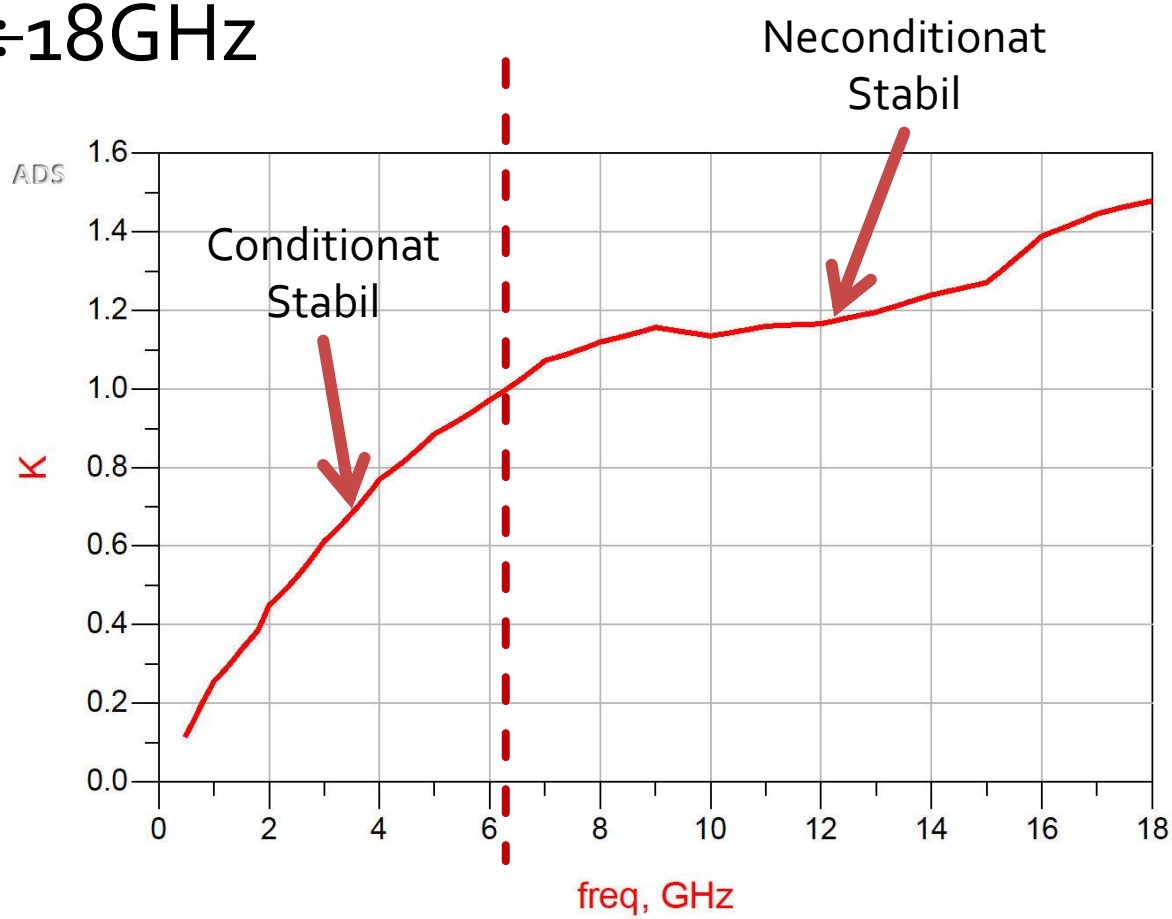

Criteriul μ

- ATF-34143 **at Vds=3V Id=20mA**.
- @0.5÷18GHz

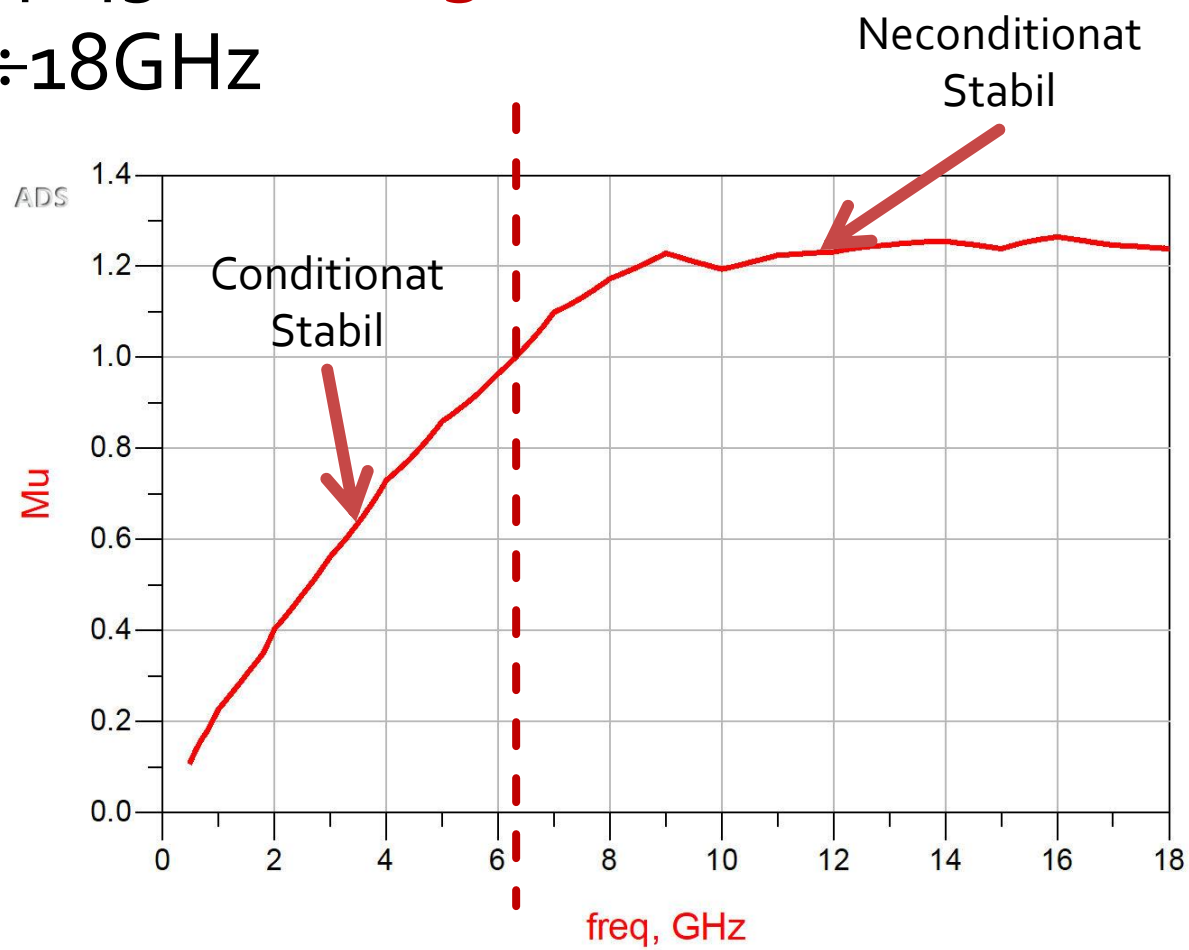

Criteriul μ'

- ATF-34143 **at Vds=3V Id=20mA**.
- @0.5÷18GHz

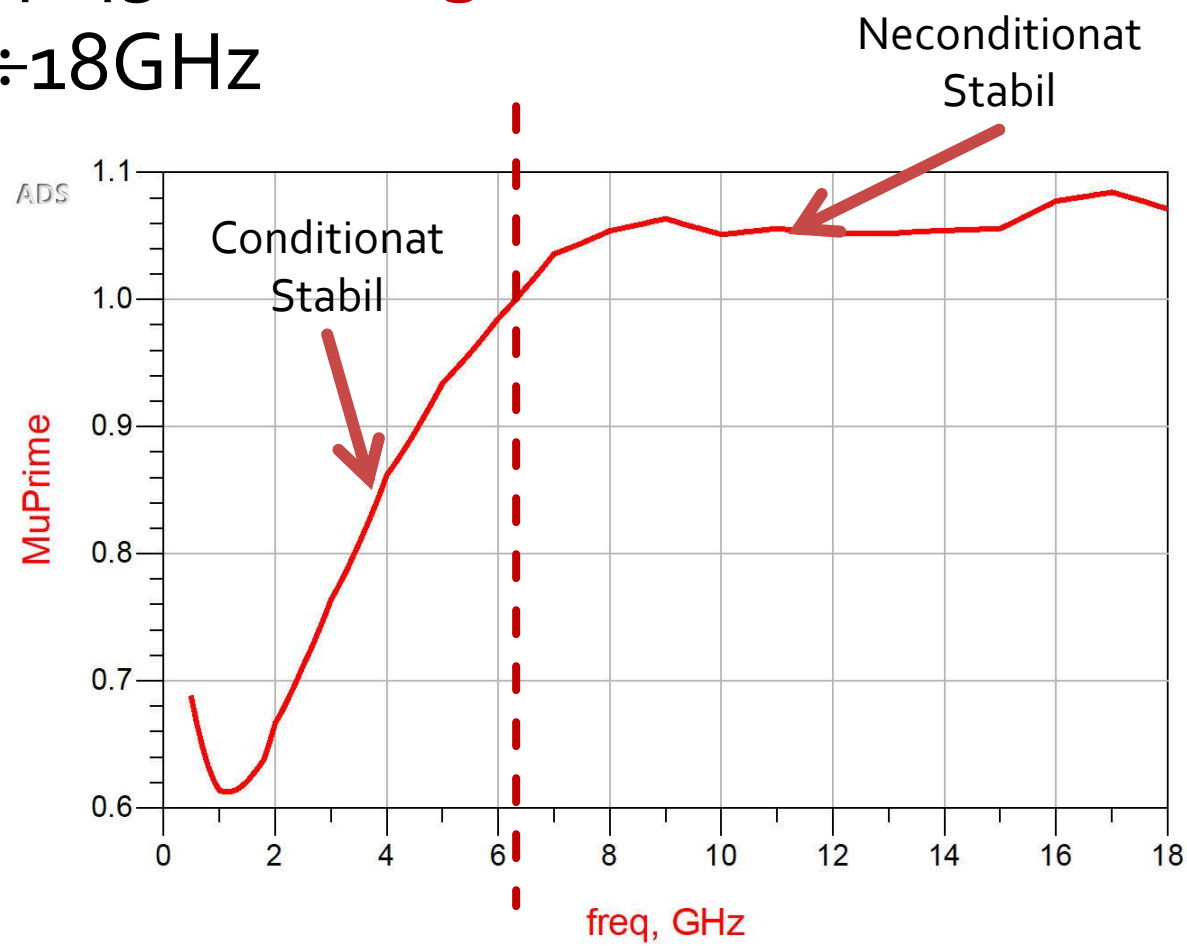

Stabilitate

- ATF-34143 **at Vds=3V Id=20mA**.
- @0.5÷18GHz
- Neconditionat stabil pentru f > 6.31GHz

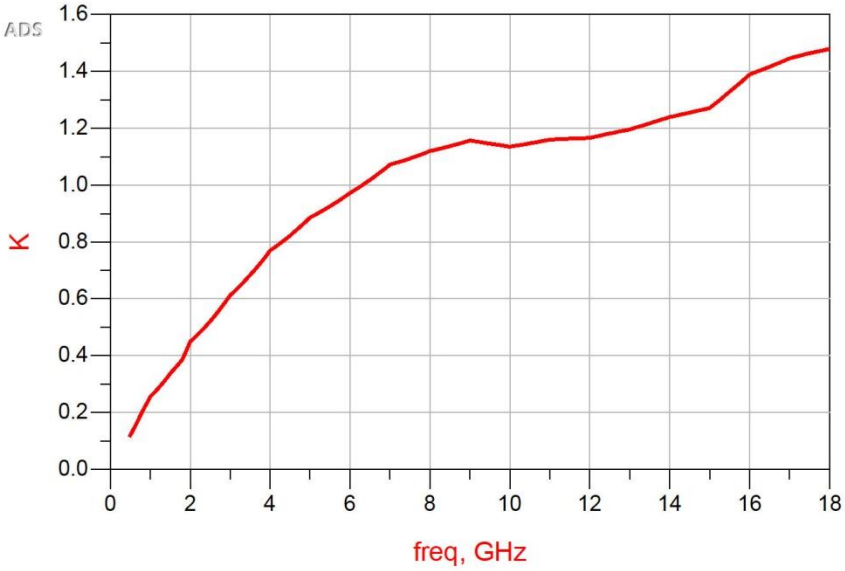

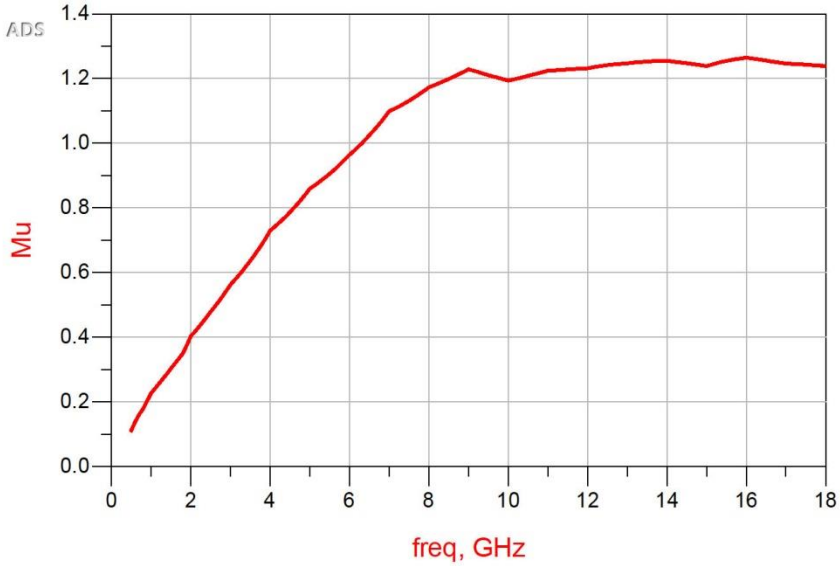

Stabilizarea unui diport

- Stabilitatea neconditionata pentru un interval larg de frecvente are avantaje importante
  - Ex: pot proiecta cu ATF 34143 un amplificator stabil (conditionat) la 5GHz, dar acest lucru este inutil daca apar oscilatii la 500MHz ($\mu \approx 0.1$)
  - **Minimul necesar** in conditii de lucru cu stabilitate conditionata este **sa se verifice stabilitatea** la frecvente inafara benzii
- Stabilitatea neconditionata poate fi fortata prin introducerea de elemente rezistive in serie/paralel la intrare si/sau iesire

Rezistenta serie la intrare

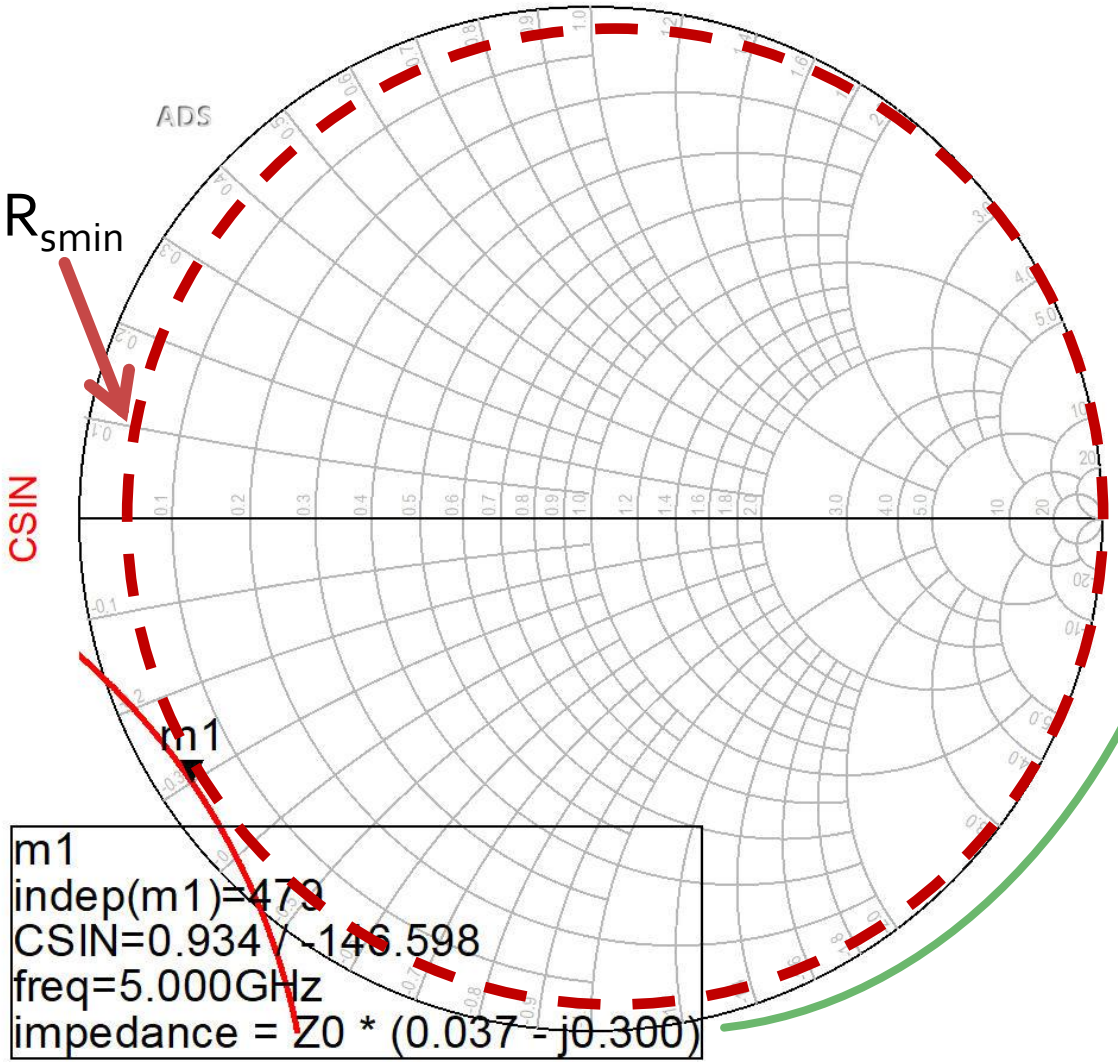

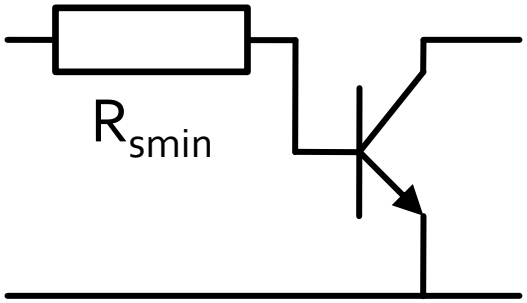

$$z = 0.037 - j \cdot 0.3$$

$$R_{s\min} = 0.037 \cdot 50\Omega = 1.85\Omega$$

ADS, Rs = 2Ω

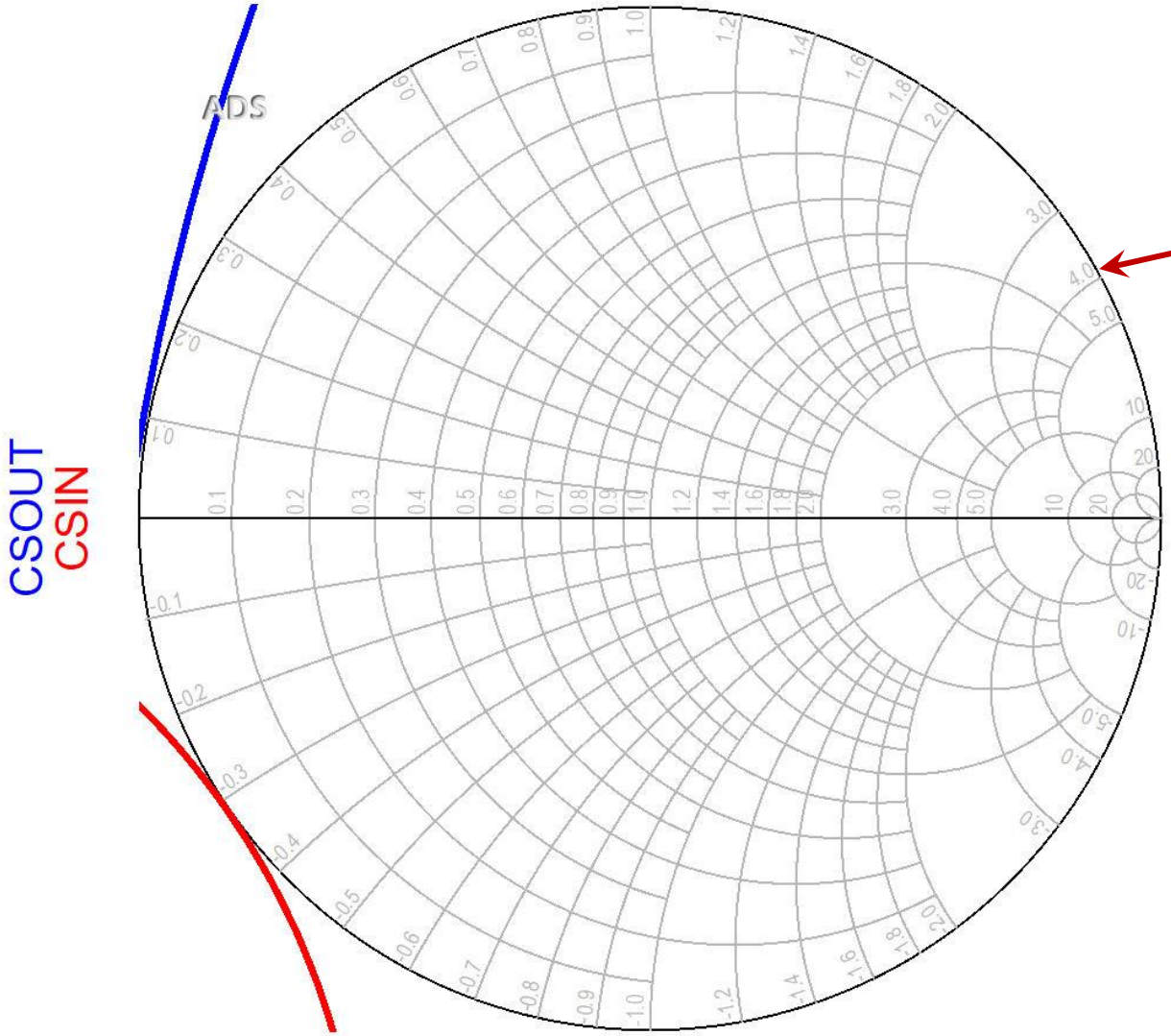

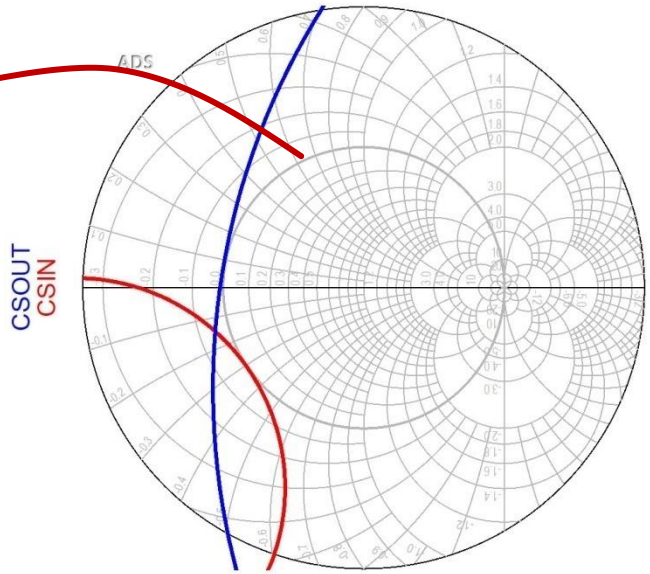

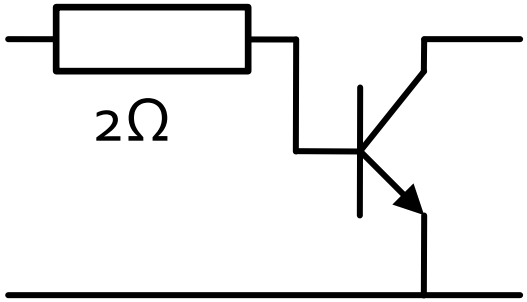

Rezistenta serie la intrare

- Rs = 2Ω
- K = 1.008, MAG = 13.694dB @ 5GHz
  - fara stabilizare, K = 0.886, MAG = 14.248dB @ 5GHz

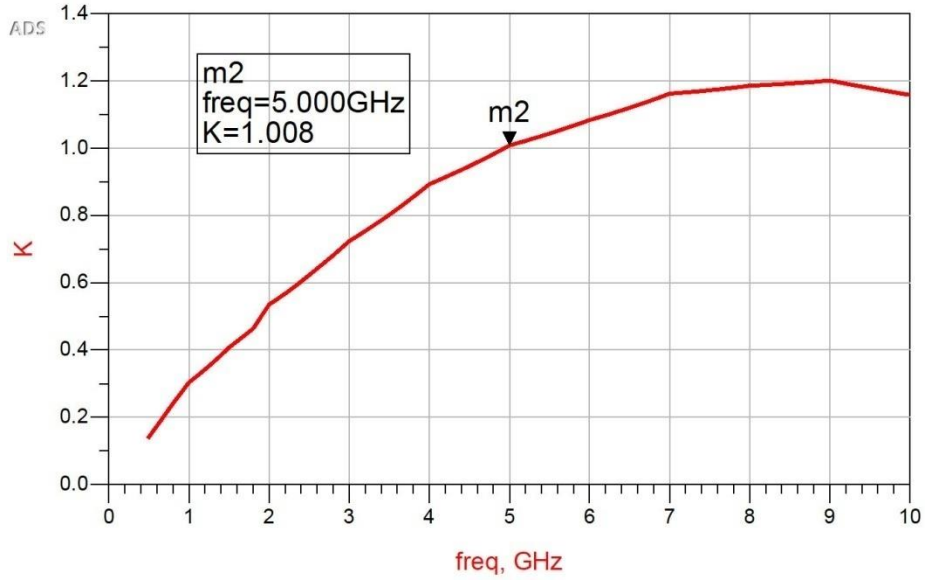

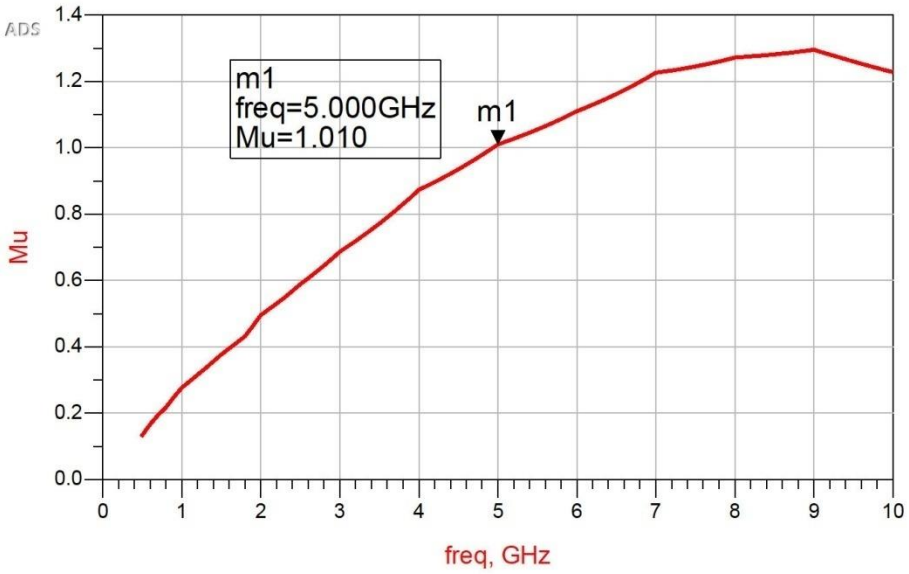

Rezistenta paralel la intrare

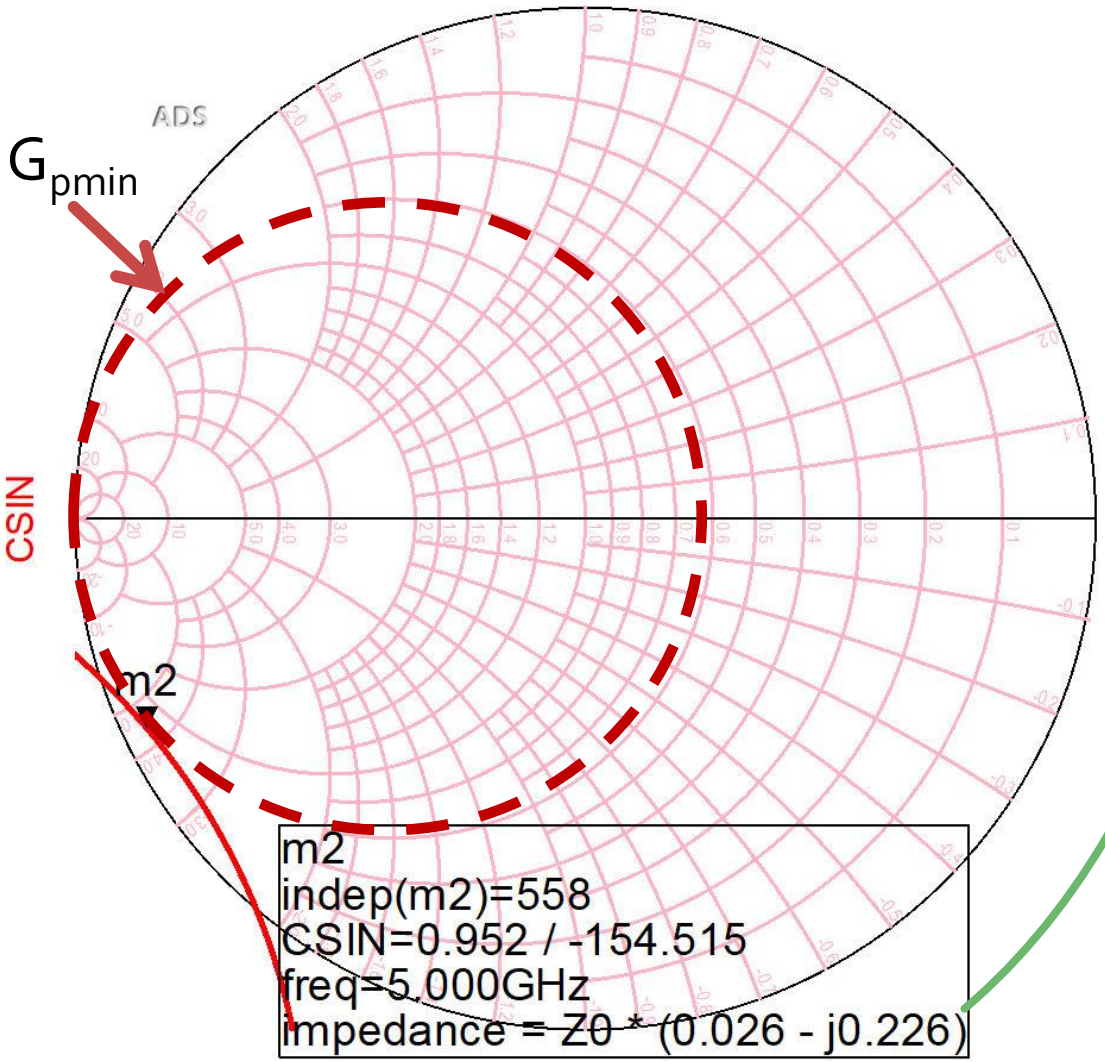

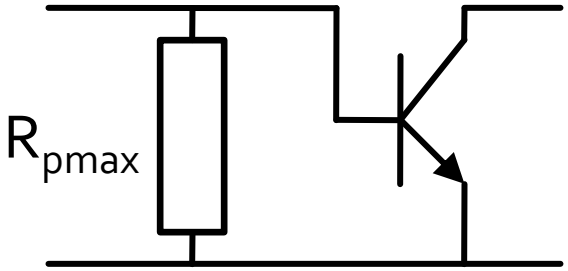

$$R_{p\max} = \frac{1}{G_{p\min}}$$

$$z = 0.026 - j \cdot 0.226$$

$$y = \frac{1}{z} = \frac{1}{0.026 - j \cdot 0.226}$$

$$y = 0.502 + j \cdot 4.367$$

$$R_{p\max} = \frac{50\Omega}{0.502} = 99.6\Omega$$

ADS, Rp = 90Ω

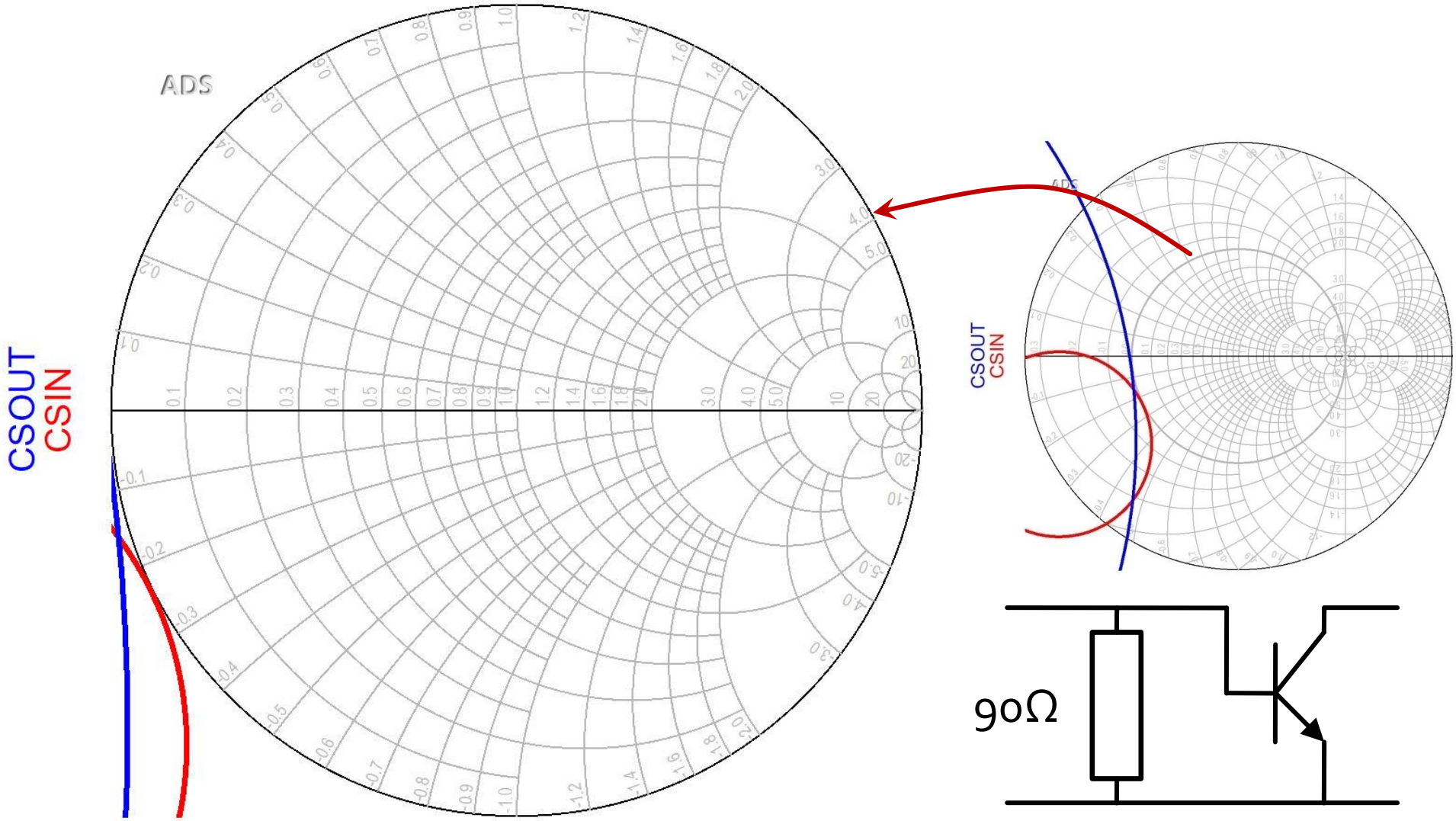

Rezistenta paralel la intrare

- Rp = 90Ω
- K = 1.013, MAG = 13.561dB @ 5GHz
  - fara stabilizare, K = 0.886, MAG = 14.248dB @ 5GHz

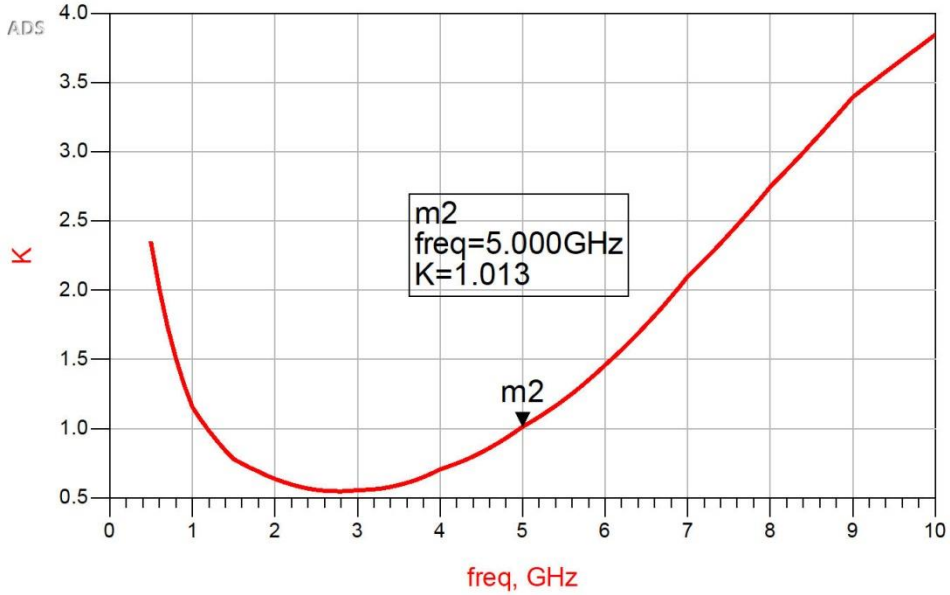

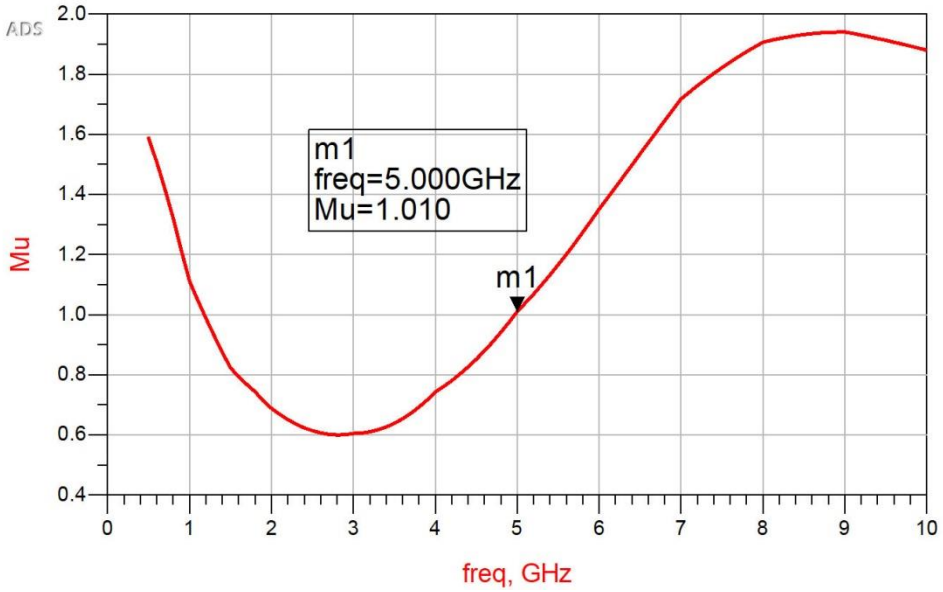

Rezistenta serie/paralel la iesire

- Procedura se poate aplica similar la iesire (plecand de la CSOUT)
- Din exemplele anterioare, incarcarea rezistiva la intrare are efect pozitiv si asupra stabilitatii la iesire si viceversa (incarcare la iesire efect asupra stabilitatii la intrare)

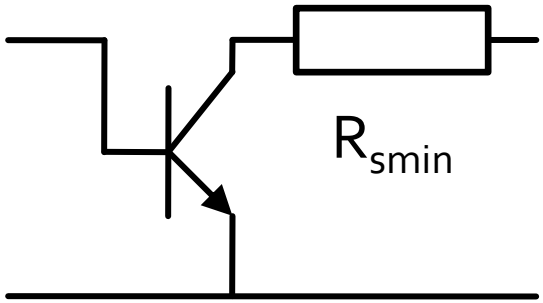

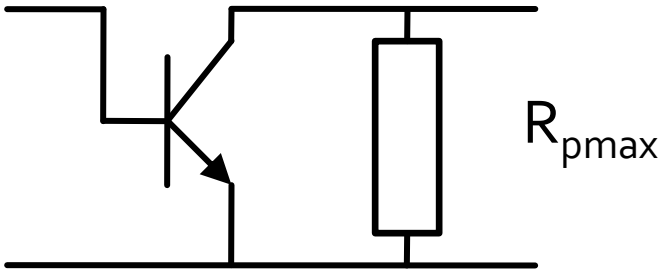

Stabilizarea unui diport

- Efect negativ asupra castigului
  - trebuie urmarit MAG/MSG in timpul proiectarii
- Efect negativ asupra zgomotului (va urma)
- Se poate alege una din cele 4 variante care ofera performante mai bune (in functie de aplicatie)
- Se pot realiza cu elemente de pasivizare selective in frecventa
  - Ex: Circuite RL, RC sacrifica performanta doar unde este necesar sa se imbunatateasca stabilitatea fara afectarea frecventelor la care dispozitivul e deja stabil
- E posibil ca aceste efecte sa apara automat ca urmare a elementelor parazite ale circuitelor de polarizare (capacitati de decuplare, socuri de radiofrecventa)

Stabilizarea unui diport

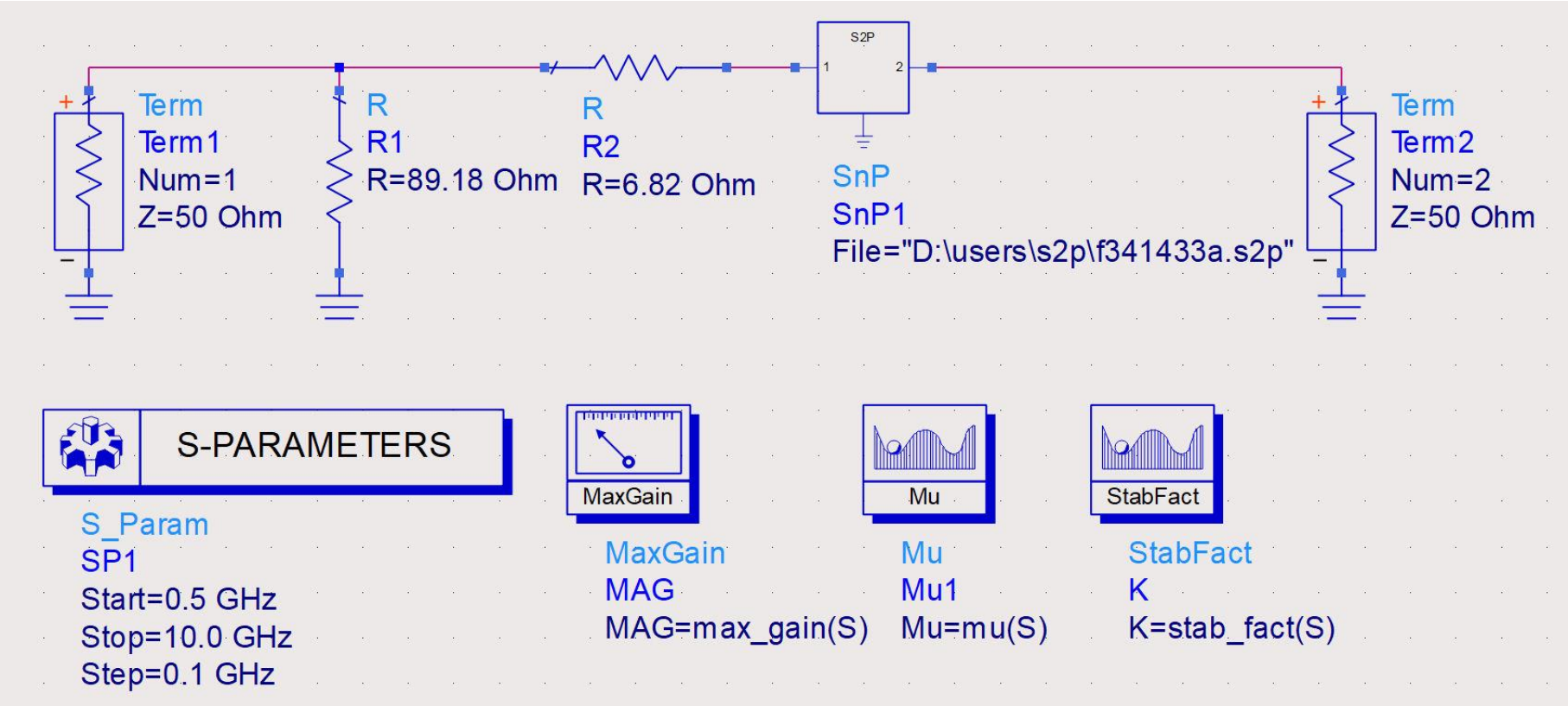

Stabilizarea unui diport

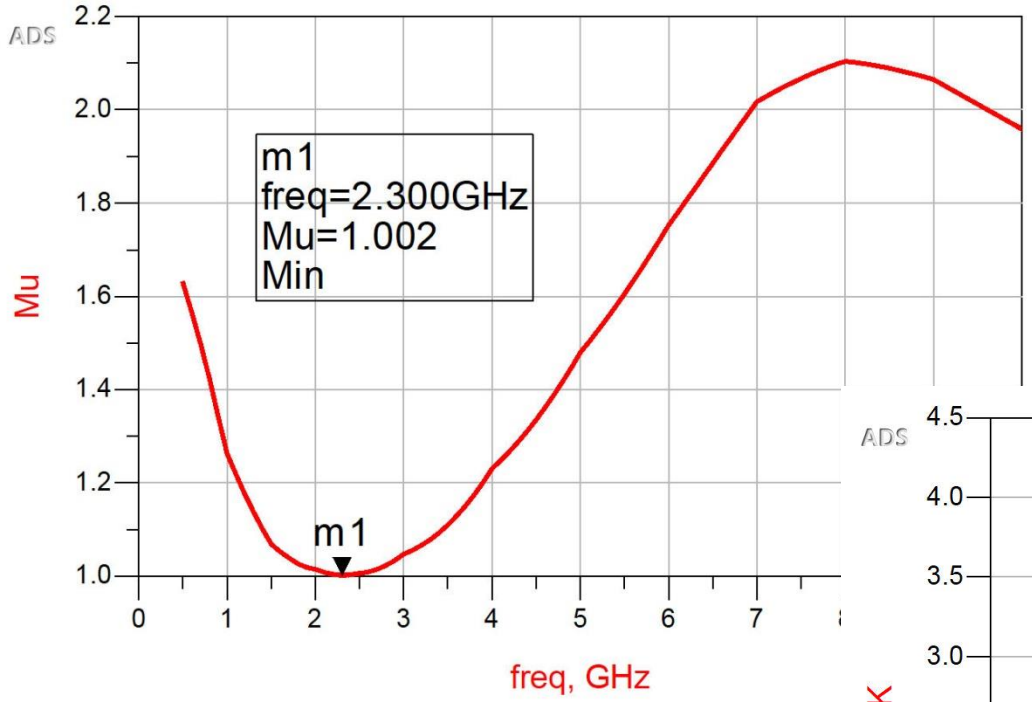

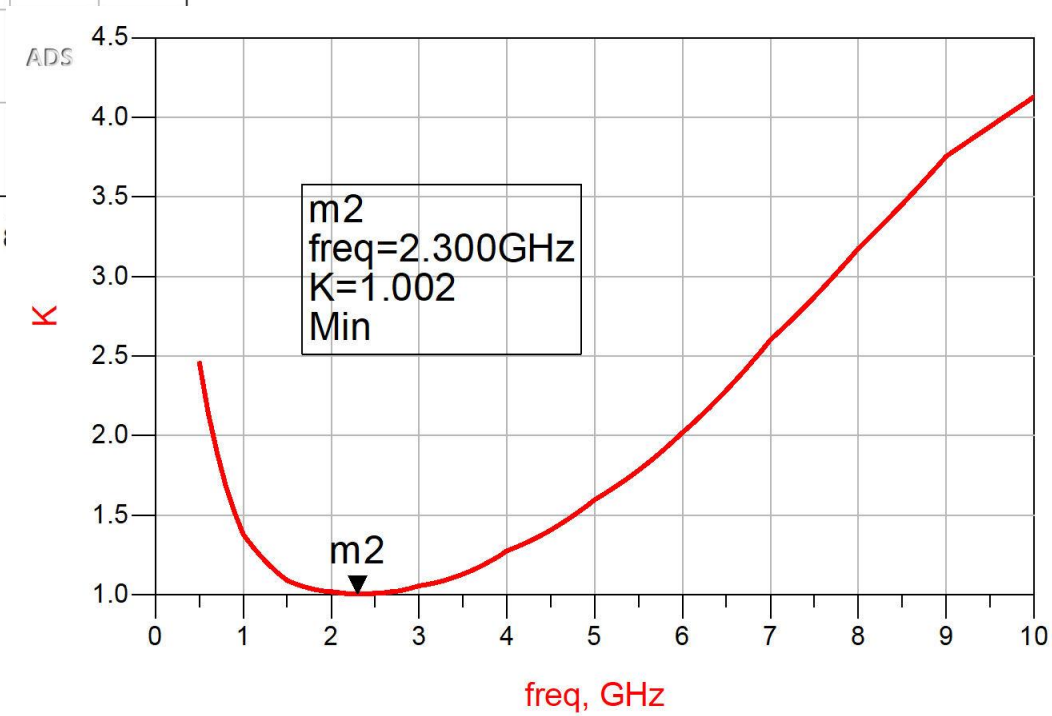

Stabilizarea unui diport

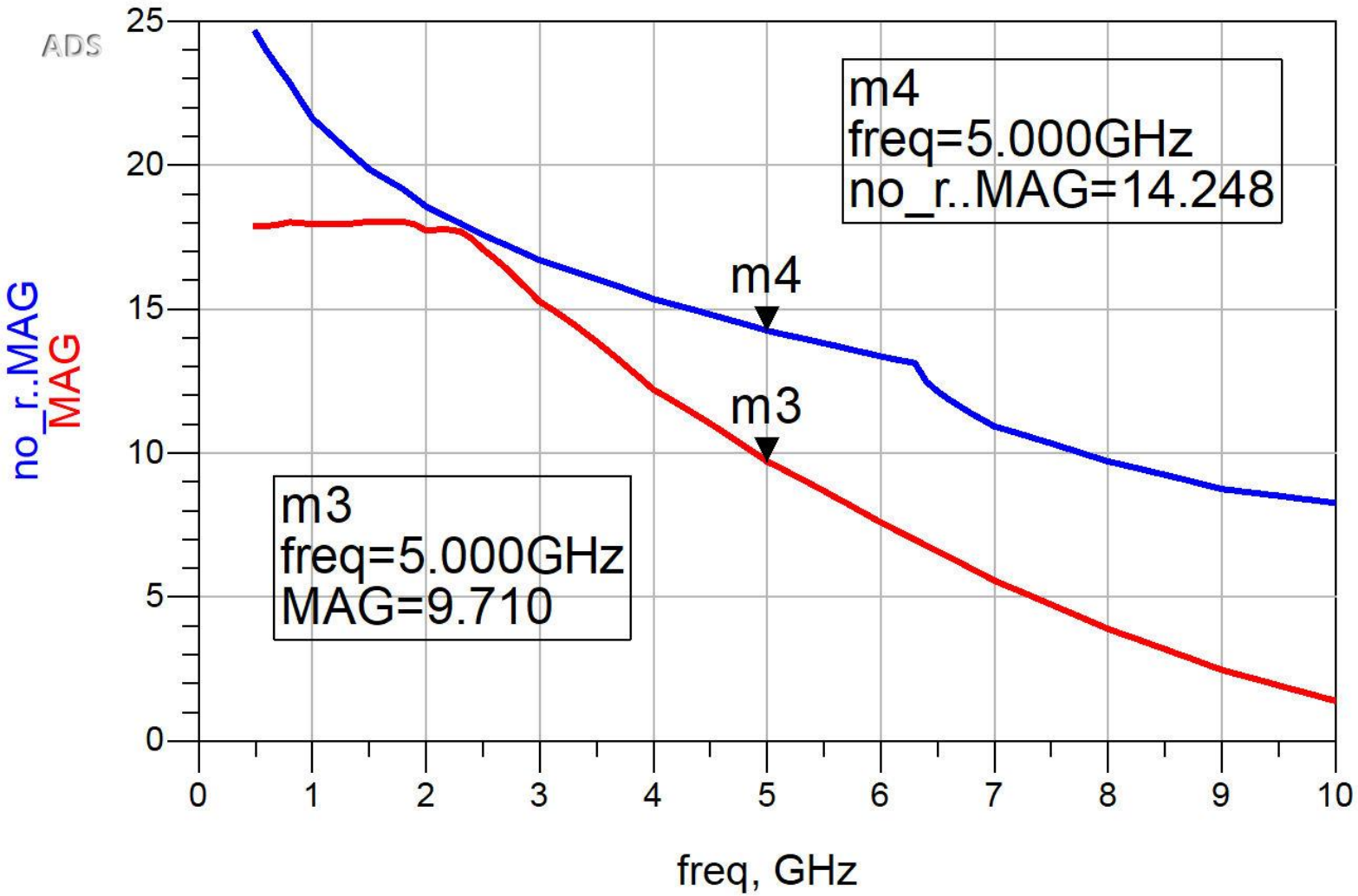

Stabilizarea unui diport

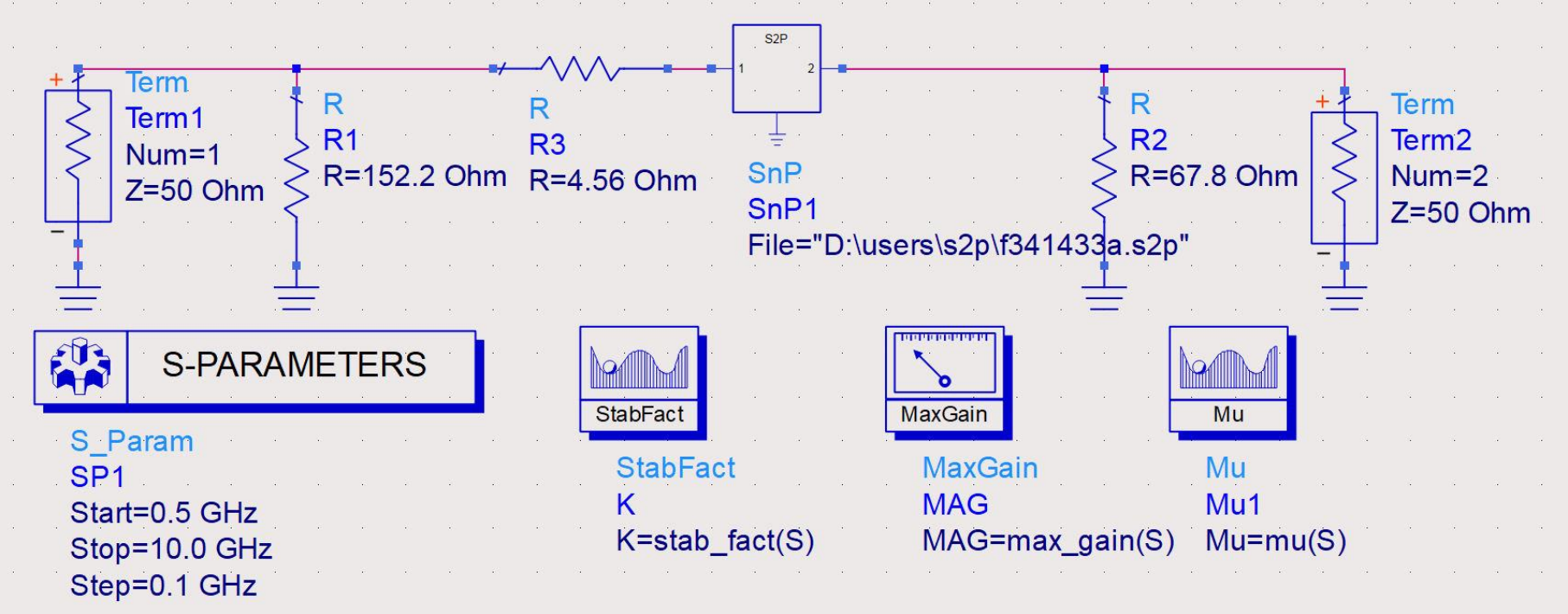

Stabilizarea unui diport

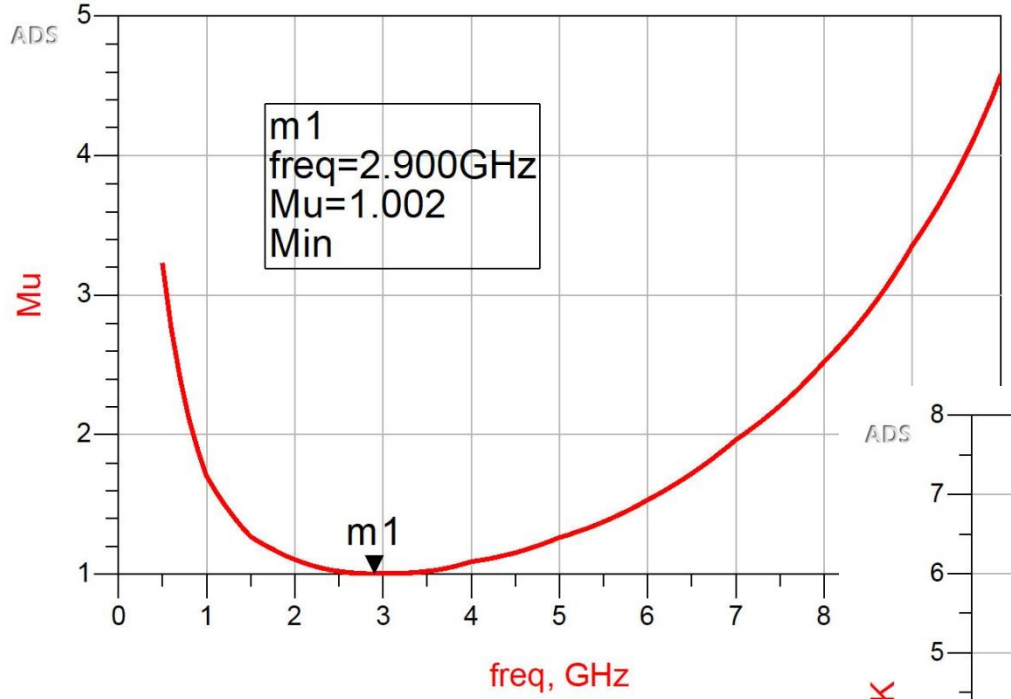

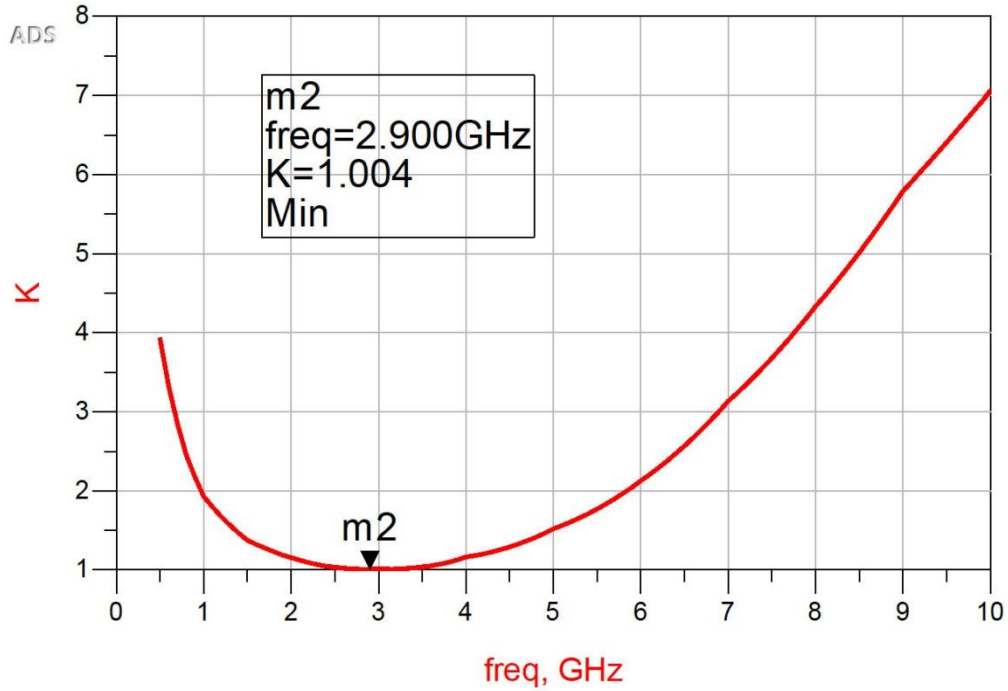

Stabilizarea unui diport

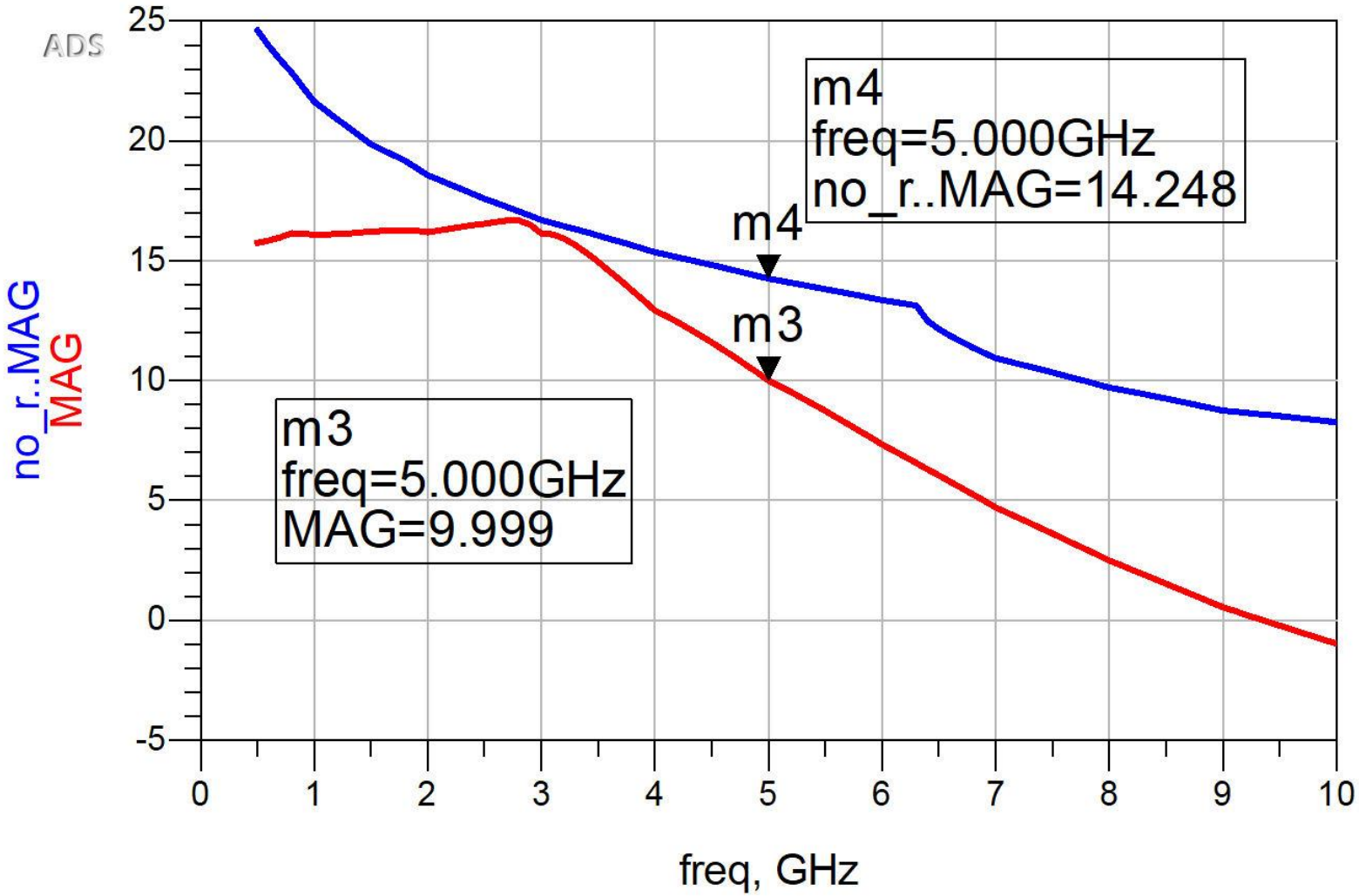

Amplificatoare de microunde

Castigul amplificatoarelor de microunde

Cuadripol Amplificator

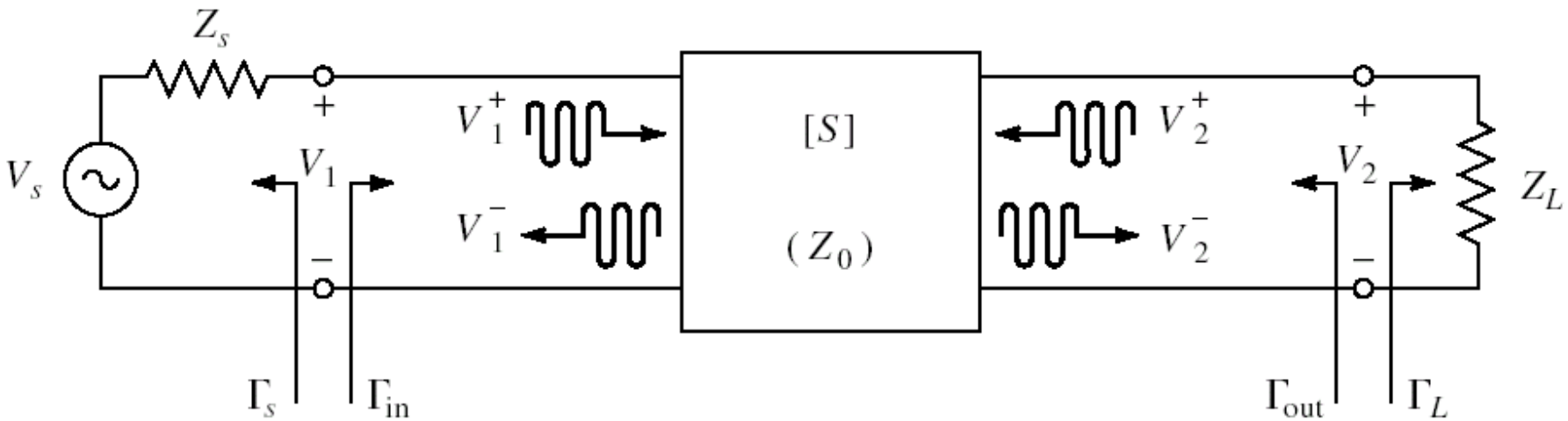

- marimi care intereseaza:
  - stabilitate
  - **castig de putere**
  - zgomot (uneori – semnal mic)
  - liniaritate (uneori – semnal mare)

Puteri / Adaptare

- Doua porturi in care adaptarea influenteaza transferul de putere

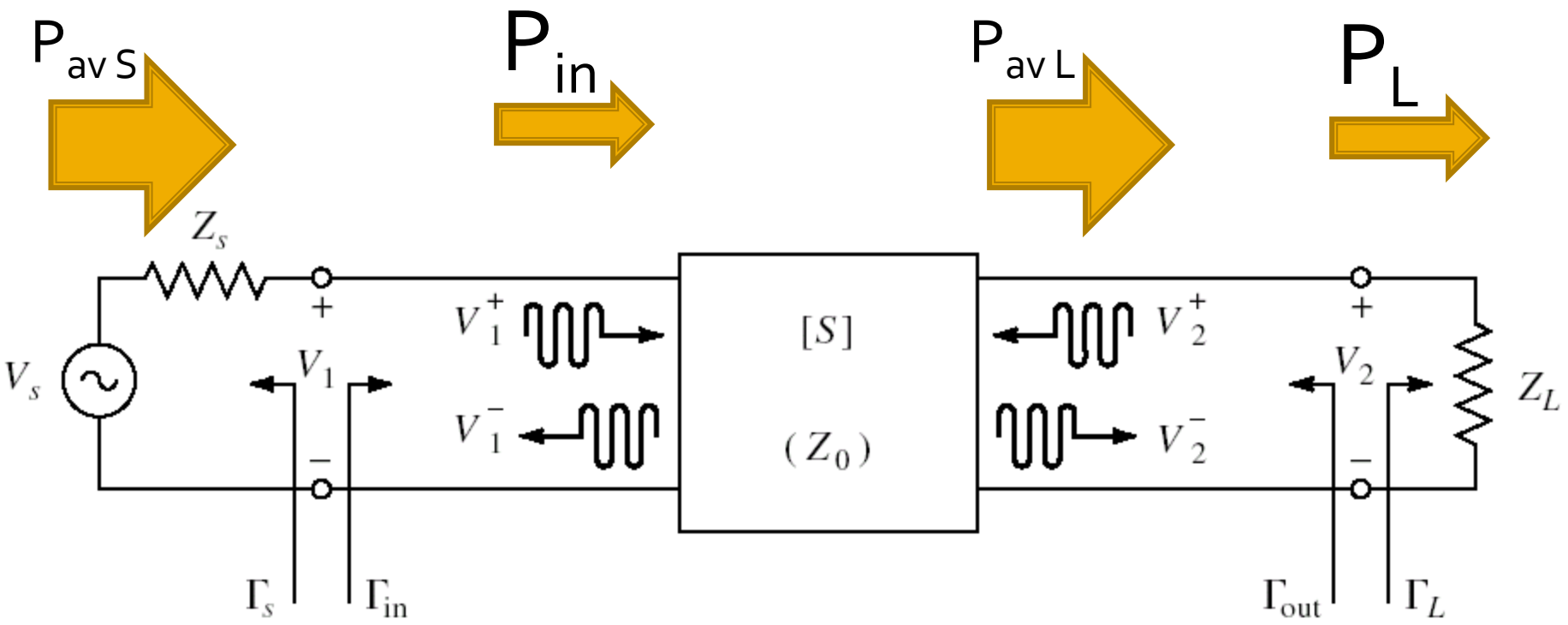

Proiectare pentru castig maxim

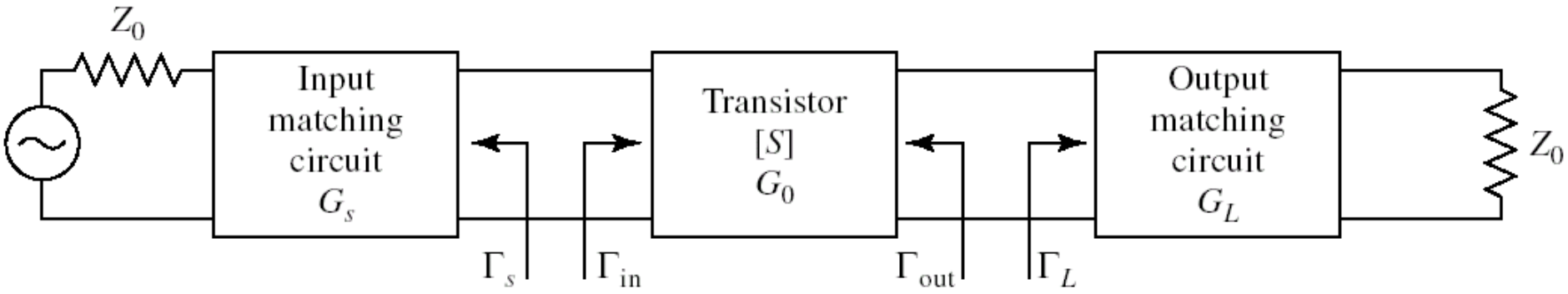

- Castig maxim de putere se obtine cand

$$\Gamma_{in} = \Gamma_S^* \qquad \Gamma_{out} = \Gamma_L^*$$

- Pentru retele de adaptare fara pierderi

$$G_{T\max} = \frac{|S_{21}|^2 \cdot \left(1-|\Gamma_S|^2\right)\cdot\left(1-|\Gamma_L|^2\right)}{|1-\Gamma_S \cdot \Gamma_{in}|^2 \cdot |1-S_{22}\cdot\Gamma_L|^2} \qquad G_{T\max} = \frac{1}{1-|\Gamma_S|^2}\cdot|S_{21}|^2 \cdot \frac{1-|\Gamma_L|^2}{|1-S_{22}\cdot\Gamma_L|^2}$$

- Pentru tranzistor bilateral (S12 ≠ 0) Γ_{in} si Γ_{out} se influenteaza reciproc deci adaptarea trebuie sa fie simultana

Diagrama Smith, adaptare, $Z_L \neq Z_0$

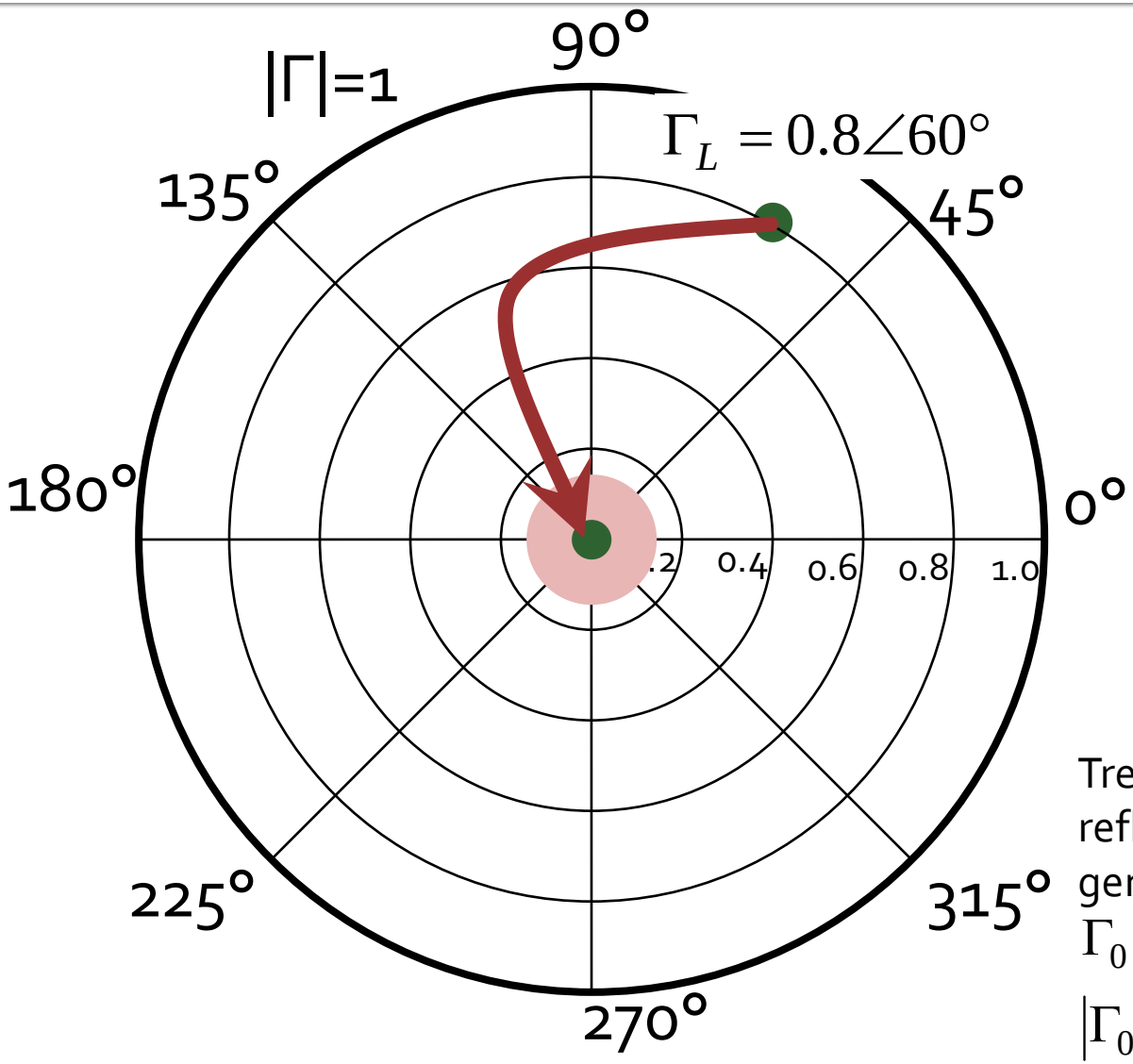

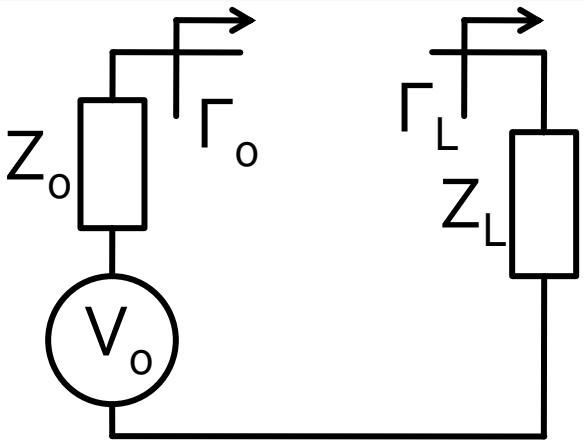

Adaptare Z_L la Z_0. Se raporteaza Z_L la Z_0

$$Z_L = 21.429\Omega + j \cdot 82.479\Omega$$

$$z_L = 0.429 + j \cdot 1.65$$

$$\Gamma_L = 0.8\angle 60°$$

Trebuie sa deplasez coeficientul de reflexie in zona in care pentru generator cu Z_0 am:

$\Gamma_0 = 0$ adaptare perfecta

$|\Gamma_0| \leq \Gamma_m$ adaptare "suficienta"

Diagrama Smith, adaptare, $Z_L=Z_o$

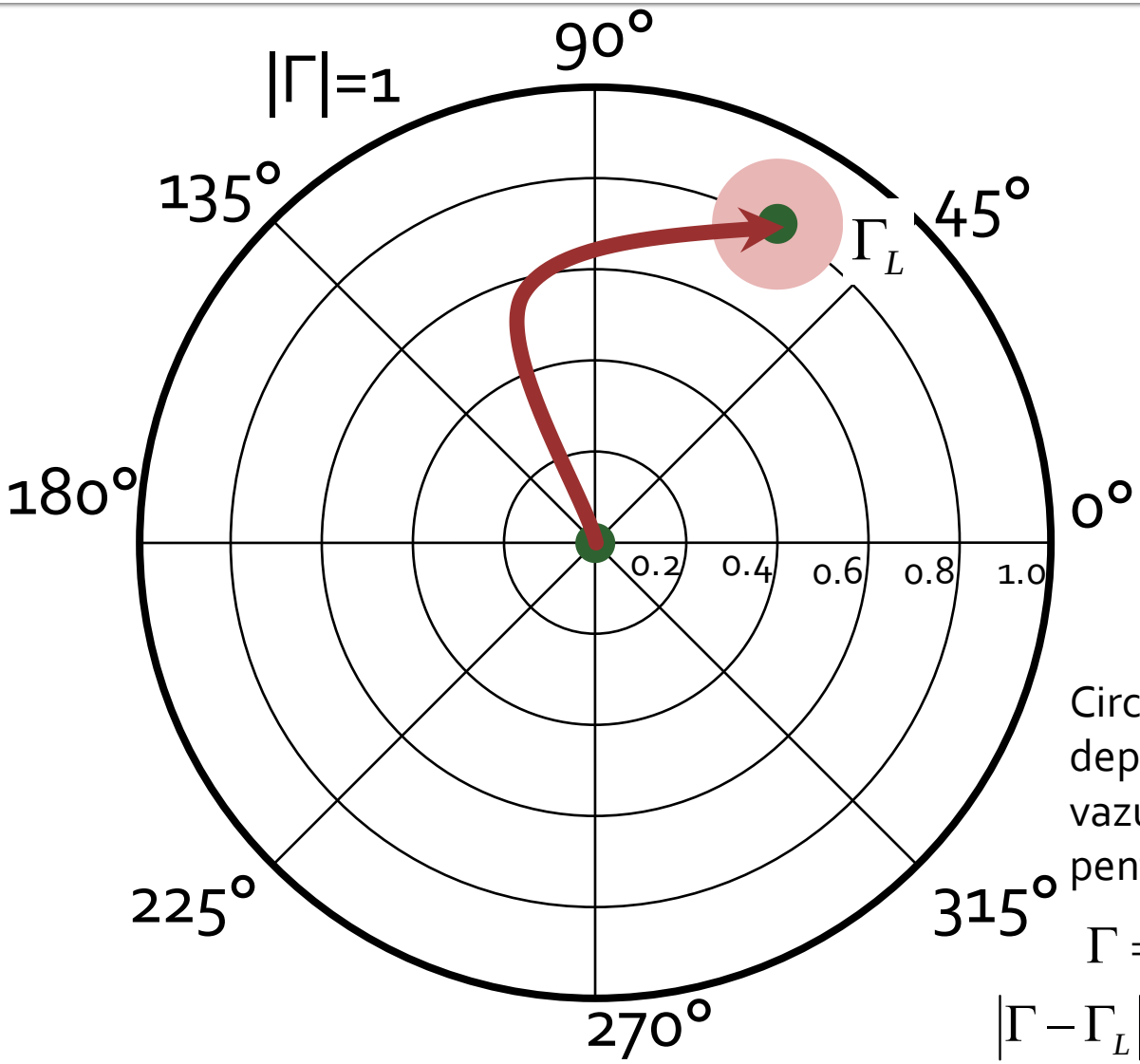

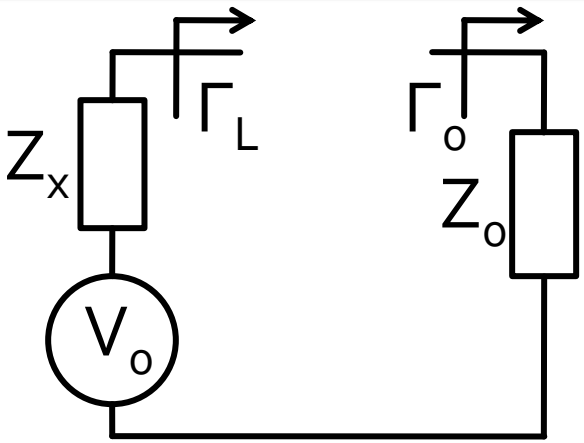

Sursa (de ex. tranzitorul) cu Z_X are nevoie de un anumit coeficient de reflexie Γ_L pentru a functiona corect

Circuitul de adaptare trebuie sa deplaseze coeficientul de reflexie vazut spre sarcina in zona in care pentru sarcina Z_o (Γ_o=0) am:

$\Gamma = \Gamma_L$ adaptare perfecta

$|\Gamma - \Gamma_L| \leq \Gamma_m$ adaptare "suficienta"

Diagrama Smith, adaptare, $Z_L=Z_0$

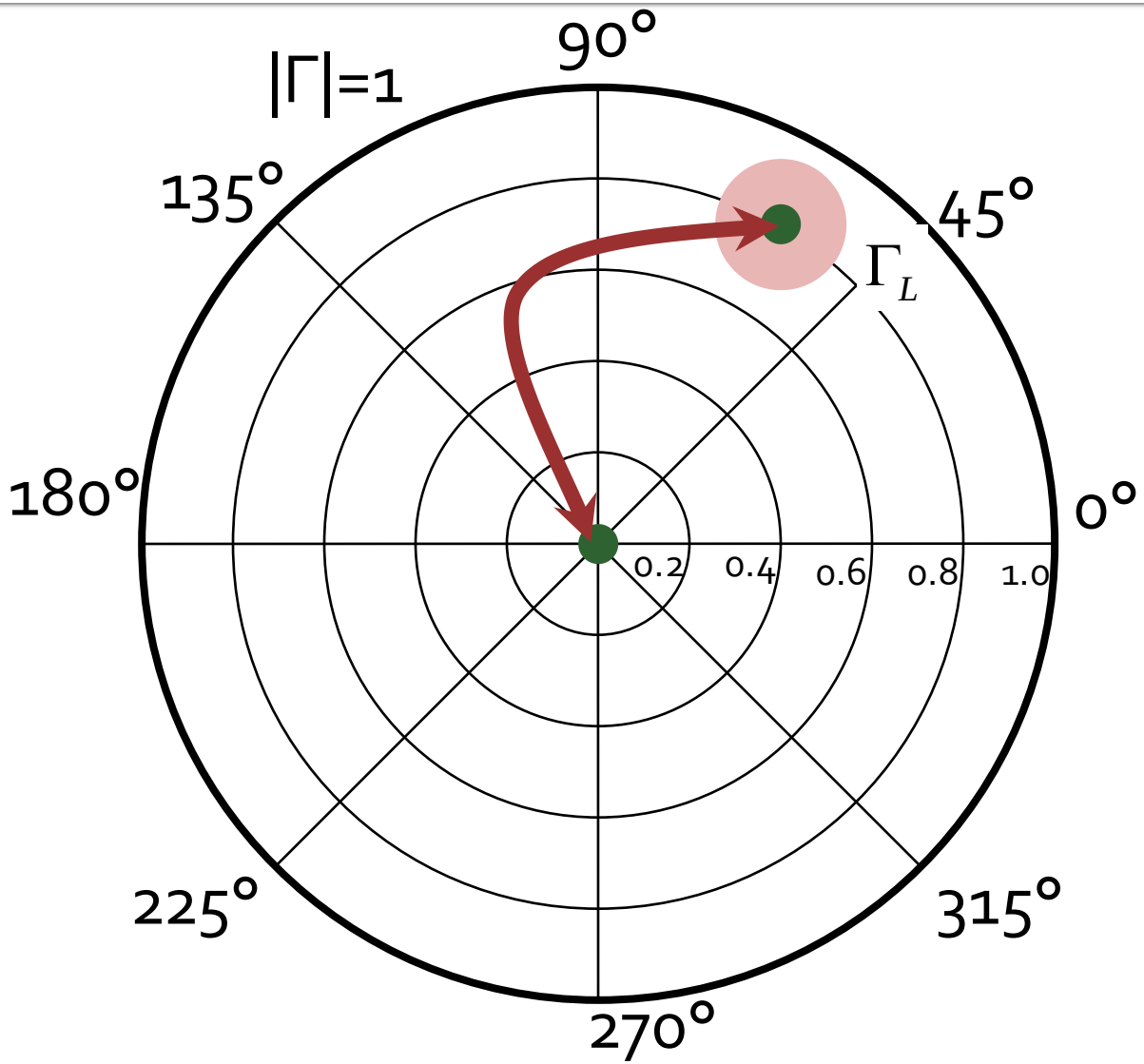

- Circuitele de adaptare care muta
  - Γ_L in Γ_0
  - Γ_0 in Γ_L
- sunt **identice** ca realizare. Difera doar prin **ordinea** in care se introduc elementele in circuitul de adaptare
- Ca urmare se pot folosi in proiectarea circuitelor de adaptare aceleasi:
  - **metode**
  - **relatii**

Adaptare simultana

$$\Gamma_{in} = \Gamma_S^*$$

$$\Gamma_{in} = S_{11} + \frac{S_{12} \cdot S_{21} \cdot \Gamma_L}{1 - S_{22} \cdot \Gamma_L}$$

$$\Gamma_S^* = S_{11} + \frac{S_{12} \cdot S_{21} \cdot \Gamma_L}{1 - S_{22} \cdot \Gamma_L}$$

$$\Gamma_{out} = \Gamma_L^*$$

$$\Gamma_{out} = S_{22} + \frac{S_{12} \cdot S_{21} \cdot \Gamma_S}{1 - S_{11} \cdot \Gamma_S}$$

$$\Gamma_L^* = S_{22} + \frac{S_{12} \cdot S_{21} \cdot \Gamma_S}{1 - S_{11} \cdot \Gamma_S}$$

- Aflam Γ_S

$$\Gamma_S = S_{11}^* + \frac{S_{12}^* \cdot S_{21}^*}{1/\Gamma_L^* - S_{22}^*}$$

$$\Gamma_L^* = \frac{S_{22} - \Delta \cdot \Gamma_S}{1 - S_{11} \cdot \Gamma_S}$$

$$\Gamma_S \cdot \left(1 - |S_{22}|^2\right) + \Gamma_S^2 \cdot \left(\Delta \cdot S_{22}^* - S_{11}\right) = \Gamma_S \cdot \left(\Delta \cdot S_{11}^* \cdot S_{22}^* - |S_{22}|^2 - \Delta \cdot S_{12}^* \cdot S_{21}^*\right) +$$

$$+ S_{11}^* \cdot \left(1 - |S_{22}|^2\right) + S_{12}^* \cdot S_{21}^* \cdot S_{22}$$

Adaptare simultana

$$\Delta \cdot \left(S_{11}^* \cdot S_{22}^* - S_{12}^* \cdot S_{21}^*\right) = |\Delta|^2$$

$$\Gamma_S^2 \cdot \underbrace{\left(S_{11} - \Delta \cdot S_{22}^*\right)}_{C} + \Gamma_S \cdot \underbrace{\left(|\Delta|^2 - |S_{11}|^2 + |S_{22}|^2 - 1\right)}_{-B} + \underbrace{\left(S_{11}^* - \Delta^* \cdot S_{22}\right)}_{C^*} = 0$$

- Ecuatie de gradul 2

$$\Gamma_S = \frac{B_1 \pm \sqrt{B_1^2 - 4 \cdot |C_1|^2}}{2 \cdot C_1}$$

- Similar

$$\Gamma_L = \frac{B_2 \pm \sqrt{B_2^2 - 4 \cdot |C_2|^2}}{2 \cdot C_2}$$

- Cu variabilele

$$\begin{cases} B_1 = 1 + |S_{11}|^2 - |S_{22}|^2 - |\Delta|^2 \\ C_1 = S_{11} - \Delta \cdot S_{22}^* \end{cases} \quad \begin{cases} B_2 = 1 + |S_{22}|^2 - |S_{11}|^2 - |\Delta|^2 \\ C_2 = S_{22} - \Delta \cdot S_{11}^* \end{cases}$$

Adaptare simultana

- Este posibila daca

$$B_1^2 - 4\cdot|C_1|^2 > 0 \qquad B_2^2 - 4\cdot|C_2|^2 > 0$$

$$\Delta\cdot\left(S_{11}^*\cdot S_{22}^* - S_{12}^*\cdot S_{21}^*\right) = |\Delta|^2$$

$$|C_1|^2 = \left|S_{11} - \Delta\cdot S_{22}^*\right|^2 = |S_{12}|^2\cdot|S_{21}|^2 + \left(1-|S_{22}|^2\right)\cdot\left(|S_{11}|^2 - |\Delta|^2\right)$$

$$B_1^2 - 4\cdot|C_1|^2 = \left(1+|S_{11}|^2\right)^2 + \left(|S_{22}|^2 + |\Delta|^2\right)^2 -$$
$$-2\cdot\left(1+|S_{11}|^2\right)\cdot\left(|S_{22}|^2 + |\Delta|^2\right) - 4\cdot|S_{12}\cdot S_{21}|^2 - 4\cdot\left(1-|S_{22}|^2\right)\cdot\left(|S_{22}|^2 - |\Delta|^2\right)$$

$$B_1^2 - 4\cdot|C_1|^2 = \left(1+|S_{11}|^2\right)^2 + \left(|S_{22}|^2 + |\Delta|^2\right)^2 -$$
$$-4\cdot|S_{11}|^2 - 4\cdot|S_{22}|^2\cdot|\Delta|^2 - 2\cdot\left(1-|S_{11}|^2\right)\cdot\left(|S_{22}|^2 - |\Delta|^2\right) - 4\cdot|S_{12}\cdot S_{21}|^2$$

Adaptare simultana

$$B_1^2 - 4\cdot|C_1|^2 = \left(1+|S_{11}|^2\right)^2 + \left(|S_{22}|^2 + |\Delta|^2\right)^2 -$$
$$-4\cdot|S_{11}|^2 - 4\cdot|S_{22}|^2\cdot|\Delta|^2 - 2\cdot\left(1-|S_{11}|^2\right)\cdot\left(|S_{22}|^2 - |\Delta|^2\right) - 4\cdot|S_{12}\cdot S_{21}|^2$$

$$B_1^2 - 4\cdot|C_1|^2 = \left(1-|S_{11}|^2\right)^2 + \left(|S_{22}|^2 - |\Delta|^2\right)^2 - 2\cdot\left(1-|S_{11}|^2\right)\cdot\left(|S_{22}|^2 - |\Delta|^2\right) - 4\cdot|S_{12}\cdot S_{21}|^2$$

$$B_1^2 - 4\cdot|C_1|^2 = \left(1-|S_{11}|^2 - |S_{22}|^2 + |\Delta|^2\right)^2 - 4\cdot|S_{12}\cdot S_{21}|^2$$

$$B_1^2 - 4\cdot|C_1|^2 = \left(K\cdot 2\cdot|S_{12}\cdot S_{21}|\right)^2 - 4\cdot|S_{12}\cdot S_{21}|^2$$

$$B_1^2 - 4\cdot|C_1|^2 = 4\cdot|S_{12}|^2\cdot|S_{21}|^2\cdot\left(K^2-1\right)$$

- Similar

$$B_2^2 - 4\cdot|C_2|^2 = 4\cdot|S_{12}|^2\cdot|S_{21}|^2\cdot\left(K^2-1\right)$$

Adaptare simultana

$$\Gamma_S = \frac{B_1 \pm \sqrt{B_1^2 - 4 \cdot |C_1|^2}}{2 \cdot C_1} \qquad \Gamma_L = \frac{B_2 \pm \sqrt{B_2^2 - 4 \cdot |C_2|^2}}{2 \cdot C_2}$$

- Necesar pentru solutii

$$|\Gamma_S| < 1 \qquad |\Gamma_L| < 1$$

$$|\Delta| = |S_{11} \cdot S_{22} - S_{12} \cdot S_{21}| < 1 \qquad \begin{cases} B_1 > 0 \\ B_2 > 0 \end{cases}$$

$$K = \frac{1 - |S_{11}|^2 - |S_{22}|^2 + |\Delta|^2}{2 \cdot |S_{12} \cdot S_{21}|} > 1 \qquad \begin{cases} B_1^2 - 4 \cdot |C_1|^2 = 4 \cdot |S_{12}|^2 \cdot |S_{21}|^2 \cdot \left(K^2 - 1\right) > 0 \\ B_2^2 - 4 \cdot |C_2|^2 = 4 \cdot |S_{12}|^2 \cdot |S_{21}|^2 \cdot \left(K^2 - 1\right) > 0 \end{cases}$$

Adaptare simultana

- Adaptarea simultana se poate realiza **numai** pentru amplificatoarele **neconditionat stabile** la frecventa de lucru, si solutia cu |Γ|<1 se obtine cu semnul "–"

$$\Gamma_S = \frac{B_1 - \sqrt{B_1^2 - 4 \cdot |C_1|^2}}{2 \cdot C_1}$$

$$\Gamma_L = \frac{B_2 - \sqrt{B_2^2 - 4 \cdot |C_2|^2}}{2 \cdot C_2}$$

$$\begin{cases} B_1 = 1 + |S_{11}|^2 - |S_{22}|^2 - |\Delta|^2 \\ C_1 = S_{11} - \Delta \cdot S_{22}^* \end{cases}$$

$$\begin{cases} B_2 = 1 + |S_{22}|^2 - |S_{11}|^2 - |\Delta|^2 \\ C_2 = S_{22} - \Delta \cdot S_{11}^* \end{cases}$$

Adaptare simultana

- In conditiile adaptarii simultane se obtine castigul de transfer maxim pentru tranzistorul bilateral

$$G_{T\max} = \frac{|S_{21}|}{|S_{12}|} \cdot \left(K - \sqrt{K^2 - 1}\right)$$

- Daca dispozitivul **nu** este **neconditionat stabil** se poate folosi ca o indicatie a capacitatii de amplificare castigul maxim stabil (Maximum Stable Gain)

$$G_{MSG} = \frac{|S_{21}|}{|S_{12}|}$$

Maximum Available Gain

- Indicator in intreaga gama de frecventa a capacitatii de a obtine castig

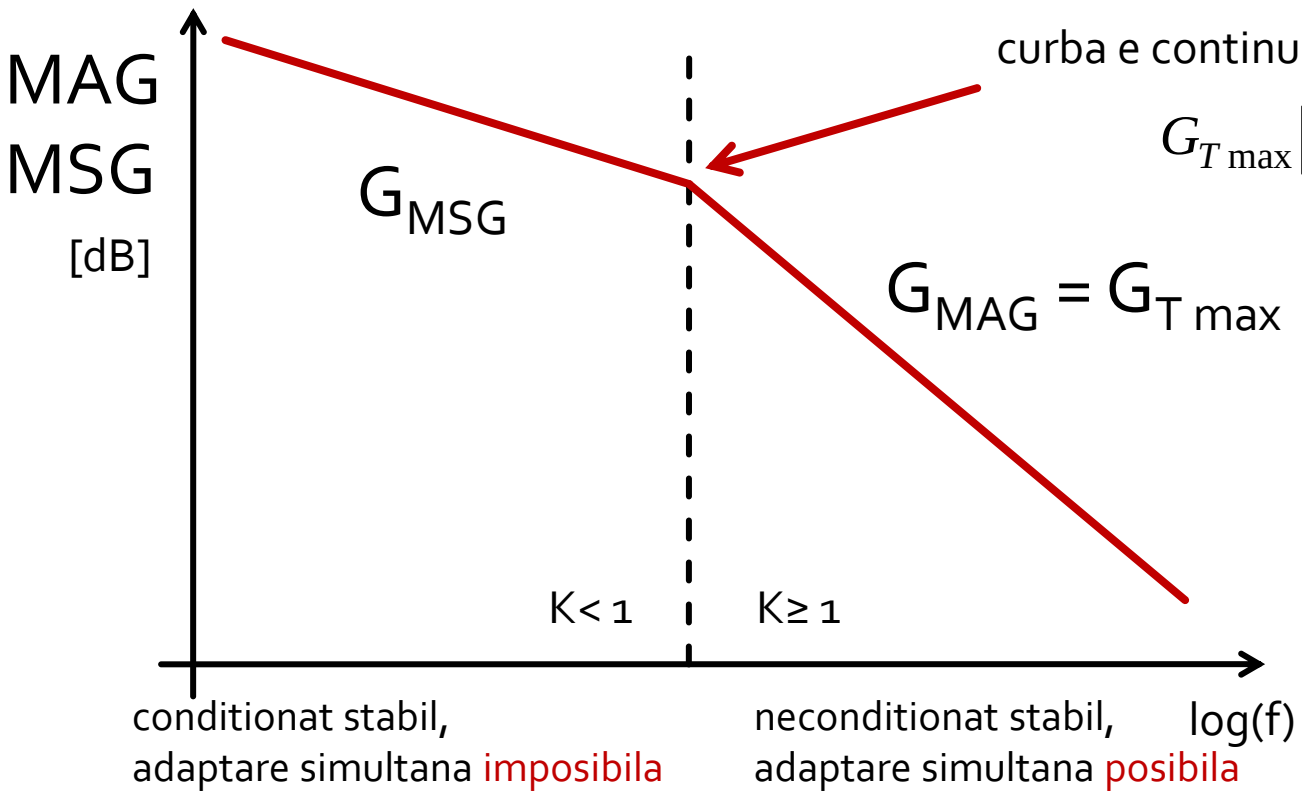

$$G_{T\,\max}\Big|_{K=1} = \frac{|S_{21}|}{|S_{12}|} = G_{MSG}$$

Stabilitate

- ATF-34143 **at Vds=3V Id=20mA**.
- @0.5÷18GHz

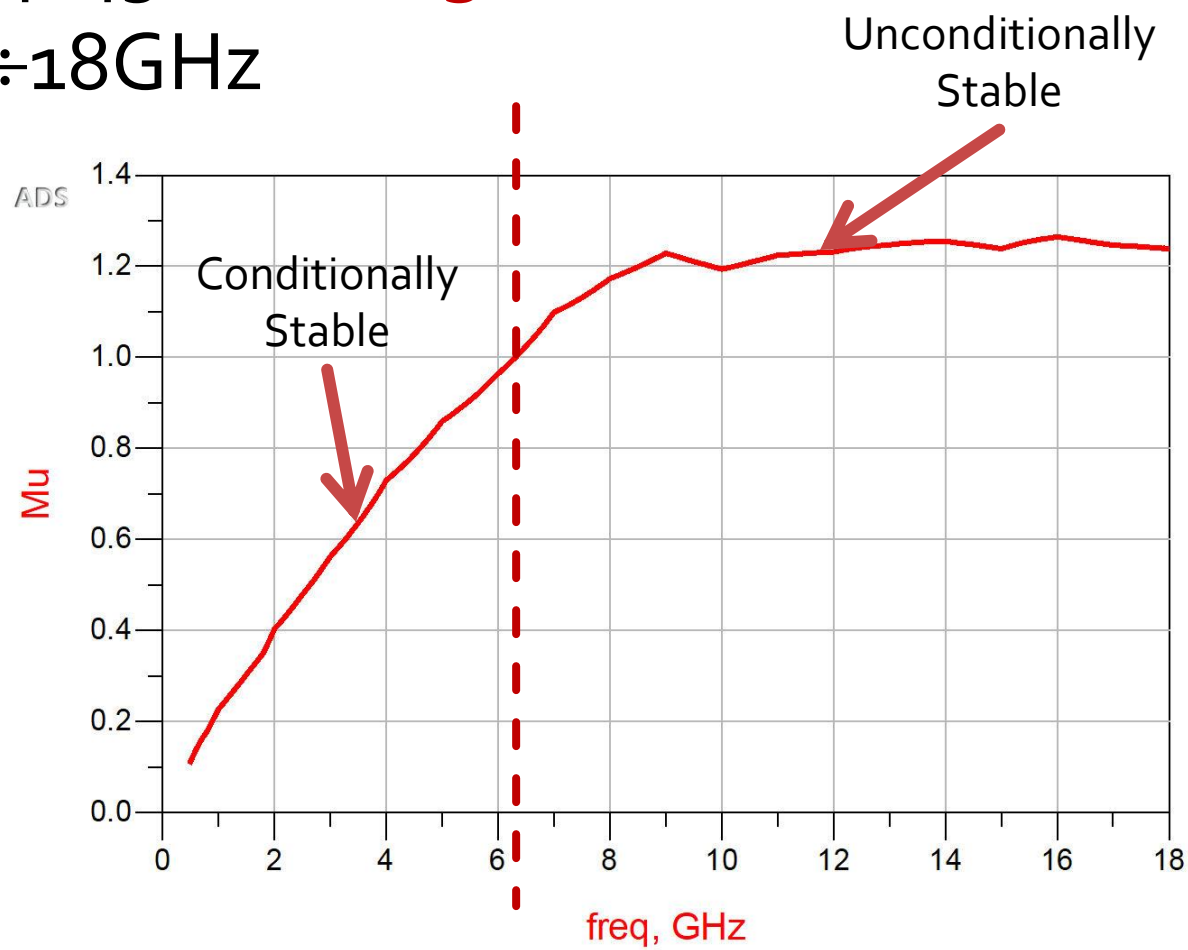

Castig

- ATF-34143 **at Vds=3V Id=20mA**.
- @0.5÷18GHz

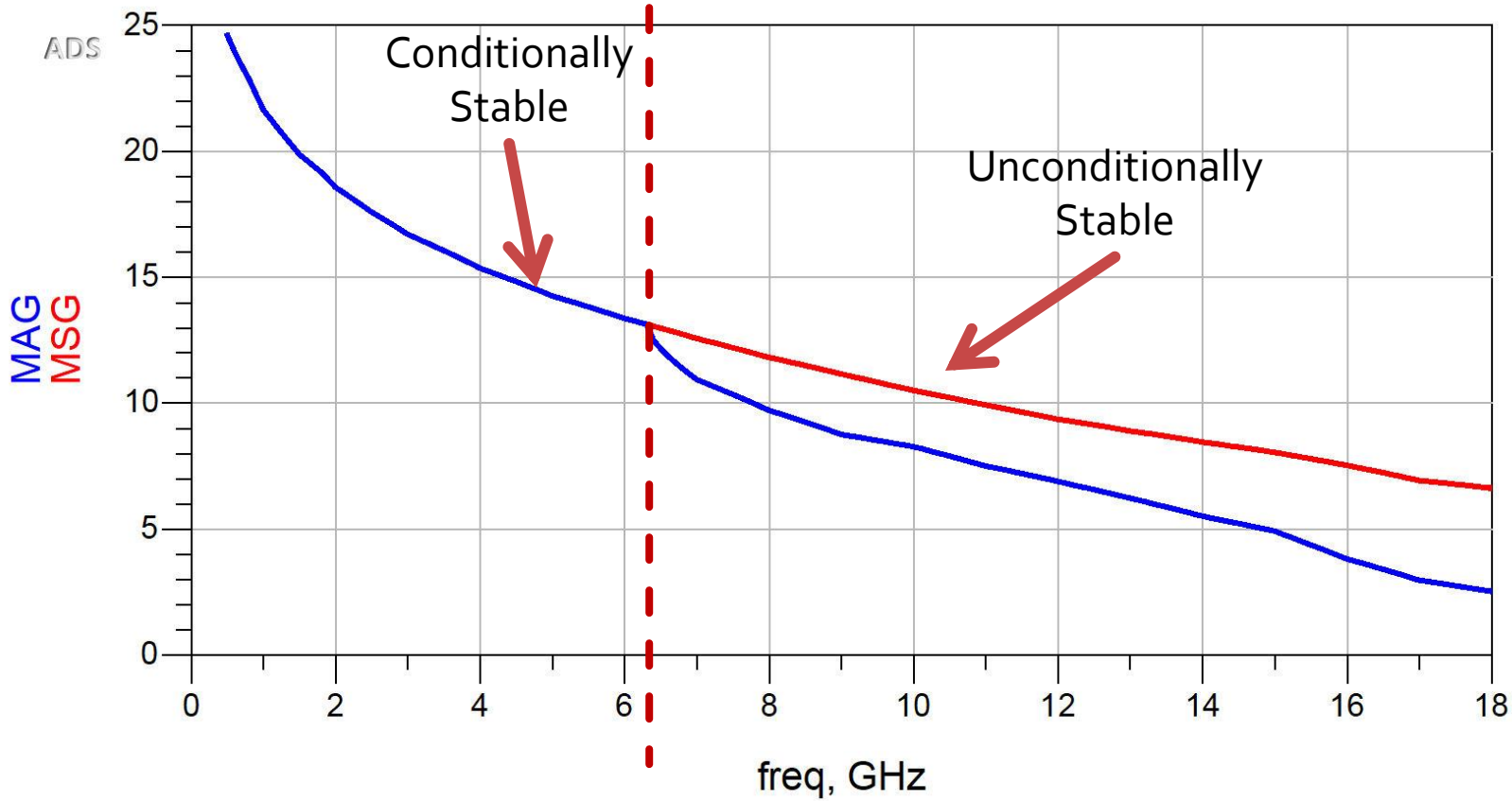

Adaptare simultana, tranzistor unilateral

- Daca amplificatorul/tranzistorul este **unilateral** (S12 = 0) adaptarea simultana implica:

$$\Gamma_{in} = S_{11} \qquad \Gamma_{out} = S_{22}$$

$$\Gamma_S = S_{11}^* \qquad \Gamma_L = S_{22}^*$$

$$G_{T\max} = \frac{1}{1-|\Gamma_S|^2} \cdot |S_{21}|^2 \cdot \frac{1-|\Gamma_L|^2}{|1-S_{22}\cdot\Gamma_L|^2} \qquad G_{TU\max} = \frac{1}{1-|S_{11}|^2} \cdot |S_{21}|^2 \cdot \frac{1}{1-|S_{22}|^2}$$

Exemplu

- ATF-34143 **at Vds=3V Id=20mA**.
  - fara stabilizare K = **0.886**, MAG = 14.248dB @ 5GHz
  - nu poate fi folosit in aceasta polarizare
- ATF-34143 **at Vds=4V Id=40mA**
  - fara stabilizare K = **1.031**, MAG = 12.9dB @ 5GHz
  - utilizam aceasta polarizare pentru a implementa un amplificator

Exemplu

- ATF-34143 **at Vds=4V Id=40mA**.
- @5GHz
  - S11 = 0.64∠111°
  - S12 = 0.117∠-27°
  - S21 = 2.923 ∠-6°
  - S22 = 0.21 ∠111°

$$\begin{cases} S_{11} = 0.64\angle 111^\circ \\ S_{11} = 0.64 \cdot \cos 111^\circ + j \cdot 0.64 \cdot \sin 111^\circ \end{cases}$$

Calcul

- Parametri S
  - S11 = -0.229+0.597·j
  - S12 = 0.104-0.053·j
  - S21 = 2.907-0.306·j
  - S22 = -0.075+0.196·j

$$\begin{cases} S_{11} = 0.64\angle 111° \\ S_{11} = 0.64 \cdot \cos 111° + j \cdot 0.64 \cdot \sin 111° \end{cases}$$

$$G_{T\,\max} = \frac{|S_{21}|}{|S_{12}|} \cdot \left(K - \sqrt{K^2 - 1}\right) = 19.497 = 12.9\,\text{dB}$$

$$G_{TU\,\max} = \frac{1}{1 - |S_{11}|^2} \cdot |S_{21}|^2 \cdot \frac{1}{1 - |S_{22}|^2} = 15.139 = 11.8\,\text{dB}$$

Calcul

$$\begin{cases} B_1 = 1 + |S_{11}|^2 - |S_{22}|^2 - |\Delta|^2 \\ C_1 = S_{11} - \Delta \cdot S_{22}^* \end{cases}$$

$$\begin{cases} B_2 = 1 + |S_{22}|^2 - |S_{11}|^2 - |\Delta|^2 \\ C_2 = S_{22} - \Delta \cdot S_{11}^* \end{cases}$$

$$\begin{cases} B_1 = ? \\ C_1 = ? \end{cases}$$

$$\begin{cases} B_2 = ? \\ C_2 = ? \end{cases}$$

$$\Gamma_S = \frac{B_1 - \sqrt{B_1^2 - 4 \cdot |C_1|^2}}{2 \cdot C_1}$$

$$\Gamma_L = \frac{B_2 - \sqrt{B_2^2 - 4 \cdot |C_2|^2}}{2 \cdot C_2}$$

$$\Gamma_S = ?$$

$$\Gamma_L = ?$$

Calcul

$$\begin{cases} B_1 = 1 + |S_{11}|^2 - |S_{22}|^2 - |\Delta|^2 \\ C_1 = S_{11} - \Delta \cdot S_{22}^* \end{cases}$$

$$\begin{cases} B_2 = 1 + |S_{22}|^2 - |S_{11}|^2 - |\Delta|^2 \\ C_2 = S_{22} - \Delta \cdot S_{11}^* \end{cases}$$

$$\begin{cases} B_1 = 1.207 \\ C_1 = -0.277 + j \cdot 0.529 \end{cases}$$

$$\begin{cases} B_2 = 0.476 \\ C_2 = -0.222 - j \cdot 0.013 \end{cases}$$

$$\Gamma_S = \frac{B_1 - \sqrt{B_1^2 - 4 \cdot |C_1|^2}}{2 \cdot C_1}$$

$$\Gamma_L = \frac{B_2 - \sqrt{B_2^2 - 4 \cdot |C_2|^2}}{2 \cdot C_2}$$

$$\Gamma_S = -0.403 - j \cdot 0.768$$

$$|\Gamma_S| = 0.867 < 1$$

$$\Gamma_S = 0.867 \angle -117.7^\circ$$

$$\Gamma_L = -0.685 + j \cdot 0.04$$

$$|\Gamma_L| = 0.686 < 1$$

$$\Gamma_L = 0.686 \angle 176.7^\circ$$

Adaptare cu stub-uri, C8

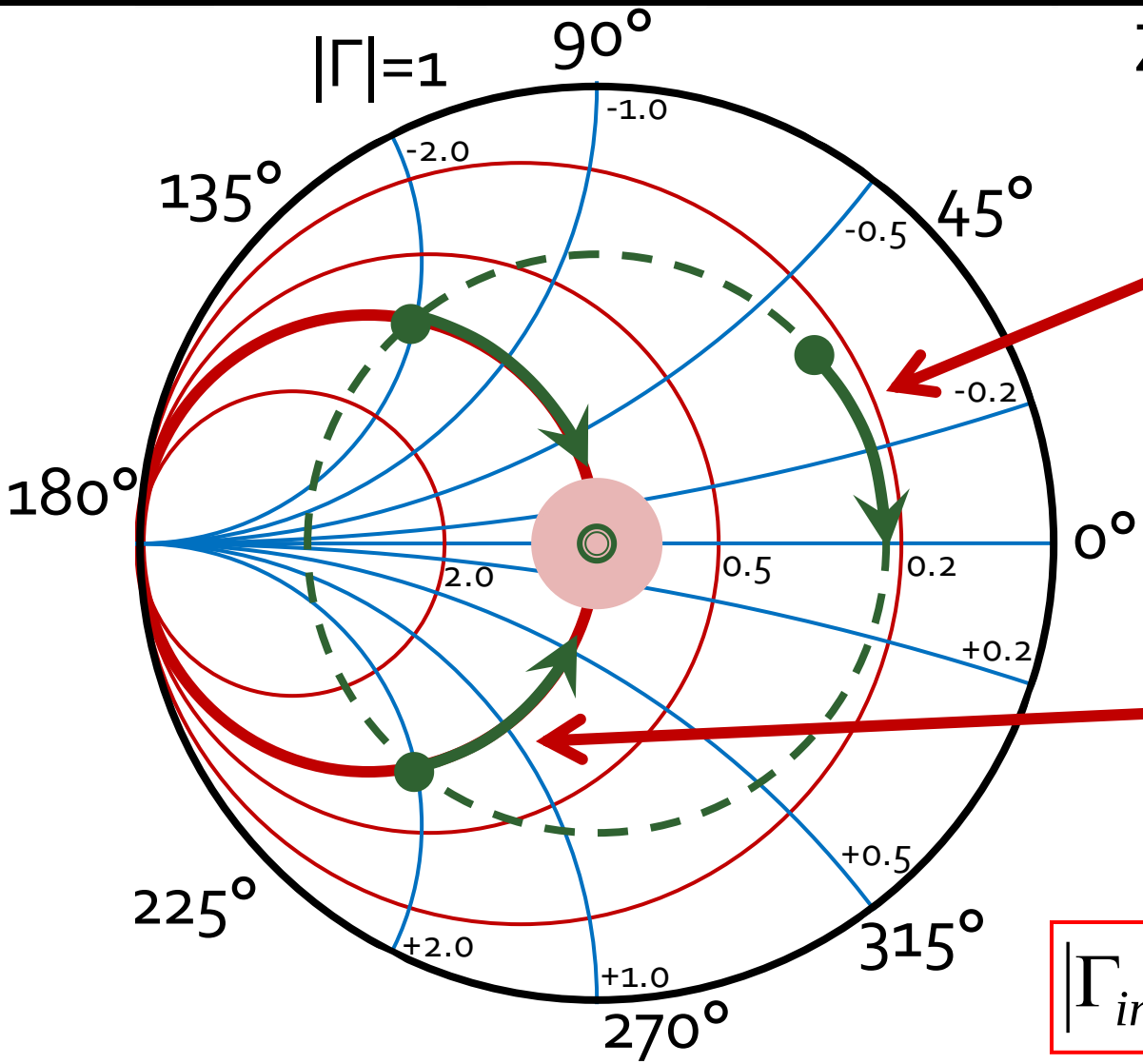

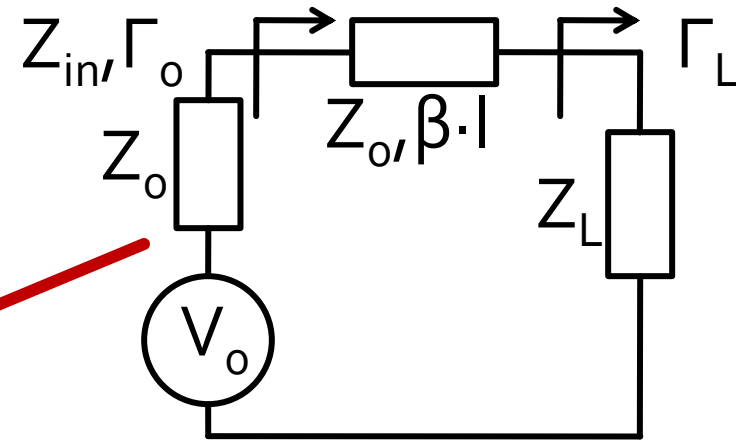

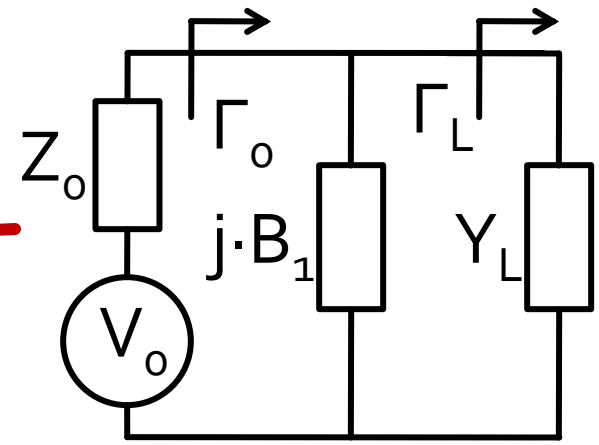

$$\boxed{|\Gamma_{in}| = |\Gamma_L|}$$

$$\boxed{g_{in} = 1}$$

Calcul analitic (Γ_S)

$$\boxed{\cos(\varphi + 2\theta) = -|\Gamma_S|}$$

$$\boxed{\theta_{sp} = \beta \cdot l = \tan^{-1} \frac{\mp 2 \cdot |\Gamma_S|}{\sqrt{1 - |\Gamma_S|^2}}}$$

$$\Gamma_S = 0.867 \angle -117.7^\circ$$

$$|\Gamma_S| = 0.867; \quad \varphi = -117.7^\circ \qquad \cos(\varphi + 2\theta) = -0.867 \Rightarrow \quad (\varphi + 2\theta) = \pm 150.1^\circ$$

- **Semnul** (+/-) solutiei alese la ecuatia **liniei serie** impune **semnul** solutiei utilizate la ecuatia **stub-ului paralel**
  - **solutia "cu +"**

$$(-117.7^\circ + 2\theta) = +150.1^\circ \qquad \theta = 133.9^\circ \qquad \operatorname{Im} y_S = \frac{-2 \cdot |\Gamma_S|}{\sqrt{1 - |\Gamma_S|^2}} = -3.477$$

$$\theta_{sp} = \tan^{-1}(\operatorname{Im} y_S) = -74^\circ(+180^\circ) \rightarrow \theta_{sp} = 106^\circ$$

  - **solutia "cu -"**

$$(-117.7^\circ + 2\theta) = -150.1^\circ \qquad \theta = -16.2^\circ(+180^\circ) \rightarrow \theta = 163.8^\circ$$

$$\operatorname{Im} y_S = \frac{+2 \cdot |\Gamma_S|}{\sqrt{1 - |\Gamma_S|^2}} = +3.477 \qquad \theta_{sp} = \tan^{-1}(\operatorname{Im} y_S) = 74^\circ$$

Calcul analitic (Γ_L)

$$\boxed{\cos(\varphi + 2\theta) = -|\Gamma_L|}$$

$$\boxed{\theta_{sp} = \beta \cdot l = \tan^{-1} \frac{\mp 2 \cdot |\Gamma_L|}{\sqrt{1 - |\Gamma_L|^2}}}$$

$$\Gamma_L = 0.686\angle 176.7^\circ$$

$$|\Gamma_L| = 0.686; \quad \varphi = 176.7^\circ$$

- **Semnul** (+/-) solutiei alese la ecuatia **liniei serie** impune **semnul** solutiei utilizate la ecuatia **stub-ului paralel**
  - **solutia "cu +"**
  - **solutia "cu -"**

Calcul analitic (Γ_L)

$$\boxed{\cos(\varphi + 2\theta) = -|\Gamma_L|}$$

$$\boxed{\theta_{sp} = \beta \cdot l = \tan^{-1} \frac{\mp 2 \cdot |\Gamma_L|}{\sqrt{1 - |\Gamma_L|^2}}}$$

$$\Gamma_L = 0.686 \angle 176.7^\circ$$

$$|\Gamma_L| = 0.686; \quad \varphi = 176.7^\circ \qquad \cos(\varphi + 2\theta) = -0.686 \Rightarrow \quad (\varphi + 2\theta) = \pm 133.3^\circ$$

- **Semnul** (+/-) solutiei alese la ecuatia **liniei serie** impune **semnul** solutiei utilizate la ecuatia **stub-ului paralel**
  - **solutia "cu +"**

$$(176.7^\circ + 2\theta) = +133.3^\circ \qquad \theta = -21.7^\circ(+180^\circ) \rightarrow \theta = 158.3^\circ$$

$$\theta_{sp} = \tan^{-1}(\operatorname{Im} y_L) = -62.1^\circ(+180^\circ) \rightarrow \theta_{sp} = 117.9^\circ \qquad \operatorname{Im} y_L = \frac{-2 \cdot |\Gamma_L|}{\sqrt{1 - |\Gamma_L|^2}} = -1.885$$

  - **solutia "cu -"**

$$(176.7^\circ + 2\theta) = -133.3^\circ \qquad \theta = -155^\circ(+180^\circ) \rightarrow \theta = 25^\circ$$

$$\operatorname{Im} y_L = \frac{+2 \cdot |\Gamma_L|}{\sqrt{1 - |\Gamma_L|^2}} = +1.885 \qquad \theta_{sp} = \tan^{-1}(\operatorname{Im} y_L) = 62.1^\circ$$

Calcul analitic

- Se alege **una** din cele doua solutii posibile la intrare

$$(\varphi+2\theta)=\begin{cases}+150.1^\circ\\-150.1^\circ\end{cases}\quad \theta=\begin{cases}133.9^\circ\\163.8^\circ\end{cases}\quad \mathrm{Im}[y_S(\theta)]=\begin{cases}-3.477\\+3.477\end{cases}\quad \theta_{sp}=\begin{cases}-74^\circ+180^\circ=106^\circ\\+74^\circ\end{cases}$$

- Similar pentru adaptarea la iesire

$$(\varphi+2\theta)=\begin{cases}+133.3^\circ\\-133.3^\circ\end{cases}\quad \theta=\begin{cases}158.3^\circ\\25.0^\circ\end{cases}\quad \mathrm{Im}[y_S(\theta)]=\begin{cases}-1.885\\+1.885\end{cases}\quad \theta_{sp}=\begin{cases}117.9^\circ\\62.1^\circ\end{cases}$$

- In total exista **4** posibilitati de adaptare intrare/iesire

ADS

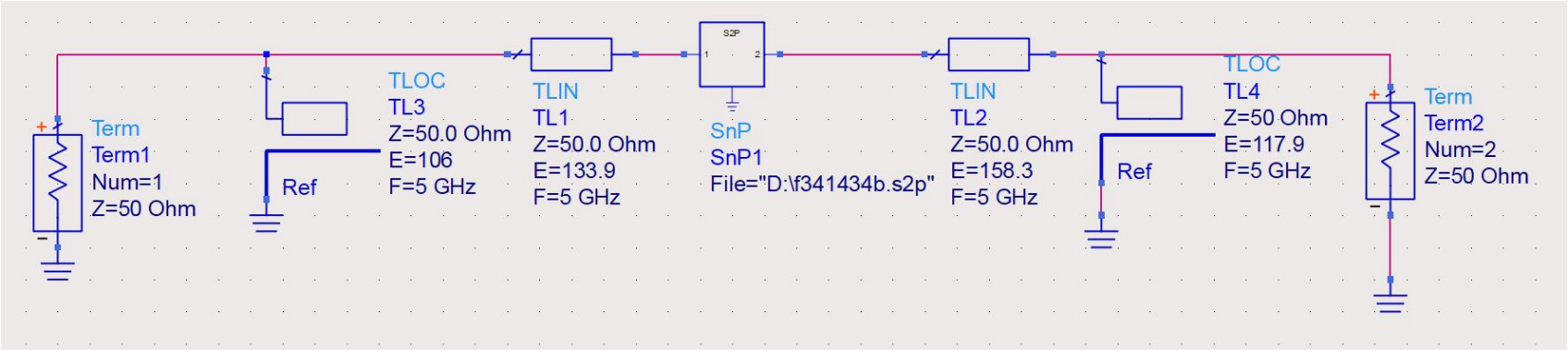

Eqn GT=10*log(mag(S(2,1))**2)

freq	S(2,1)	GT	S(1,1)	S(2,2)
5.000 GHz	4.415 / 157.353	12.900	0.004 / 86.088	0.004 / 37.766

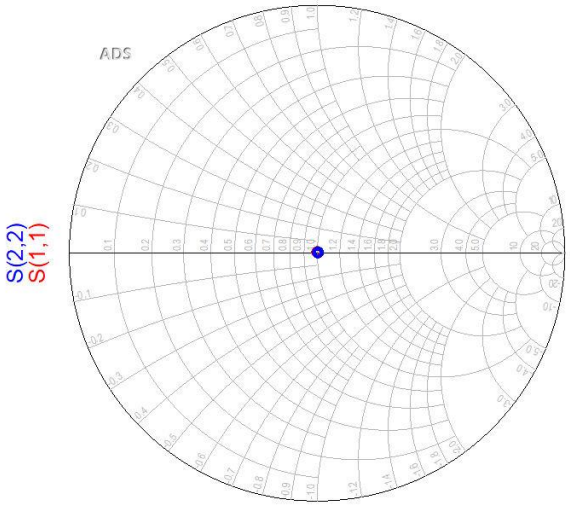

freq (5.000GHz to 5.000GHz)

ADS

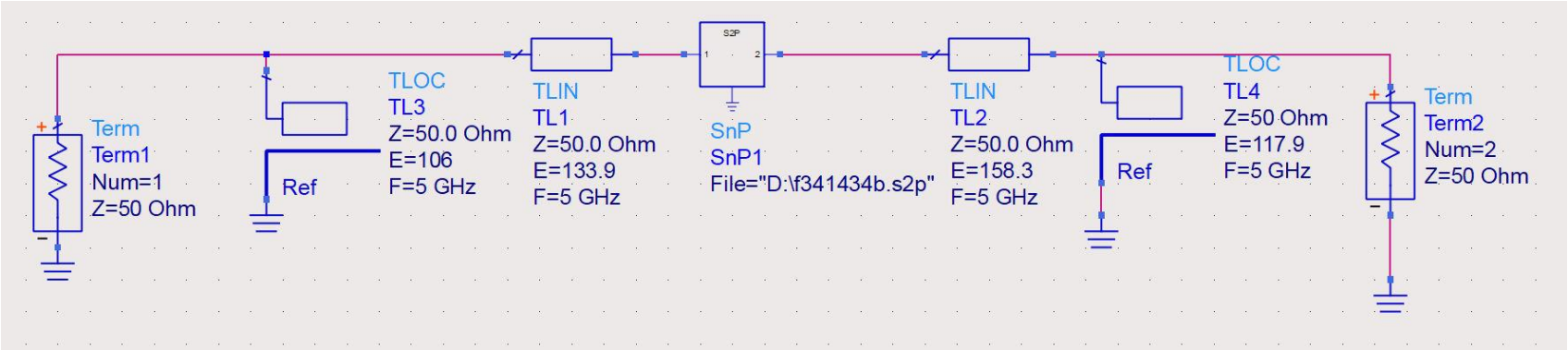
Term
Term1
Num=1
Z=50 Ohm
Ref
TLOC
TL3
Z=50.0 Ohm
E=106
F=5 GHz
TLIN
TL1
Z=50.0 Ohm
E=133.9
F=5 GHz
S2P
SnP
SnP1
File="D:\f341434b.s2p"
TLIN
TL2
Z=50.0 Ohm
E=158.3
F=5 GHz
Ref
TLOC
TL4
Z=50 Ohm
E=117.9
F=5 GHz
Term
Term2
Num=2
Z=50 Ohm

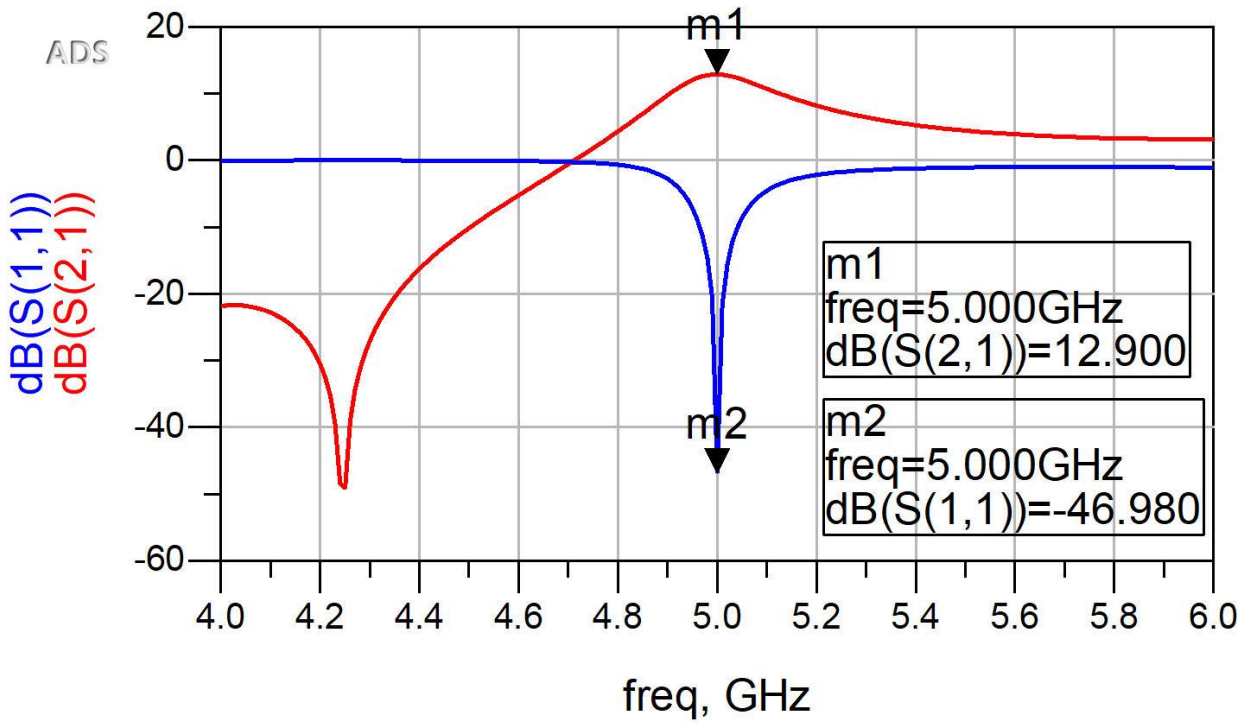
ADS
m1
m2
m1
freq=5.000GHz
dB(S(2,1))=12.900
m2
freq=5.000GHz
dB(S(1,1))=-46.980
dB(S(1,1))
dB(S(2,1))
20
0
-20
-40
-60
4.0
4.2
4.4
4.6
4.8
5.0
5.2
5.4
5.6
5.8
6.0
freq, GHz

Amplificatoare de microunde

Proiectare pentru castig impus

Cuadripol Amplificator

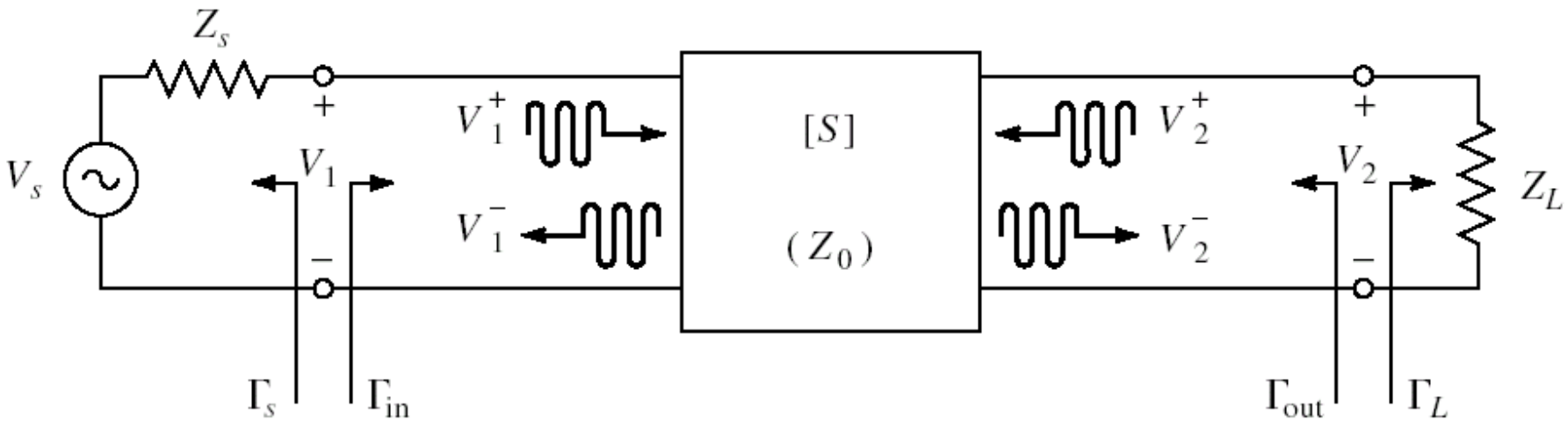

- marimi care intereseaza:
  - stabilitate
  - **castig de putere**
  - zgomot (uneori – semnal mic)
  - liniaritate (uneori – semnal mare)

Proiectare pentru castig impus

- Deseori este necesara o alta abordare decat "forta bruta" si se prefera obtinerea unui **castig mai mic** decat cel maxim posibil pentru:
  - conditii de zgomot avantajoase (L3 + C10-11)
  - conditii de stabilitate mai bune
  - obtinerea unui VSWR mai mic
  - controlul performantelor la mai multe frecvente
  - banda de functionare a amplificatorului

VSWR

- Anumite aplicatii pot impune un raport intre tensiunile maxime/minime pe linii
  - VSWR = const → |Γ| = const

$$VSWR = \frac{V_{\max}}{V_{\min}} = \frac{1+|\Gamma|}{1-|\Gamma|}$$

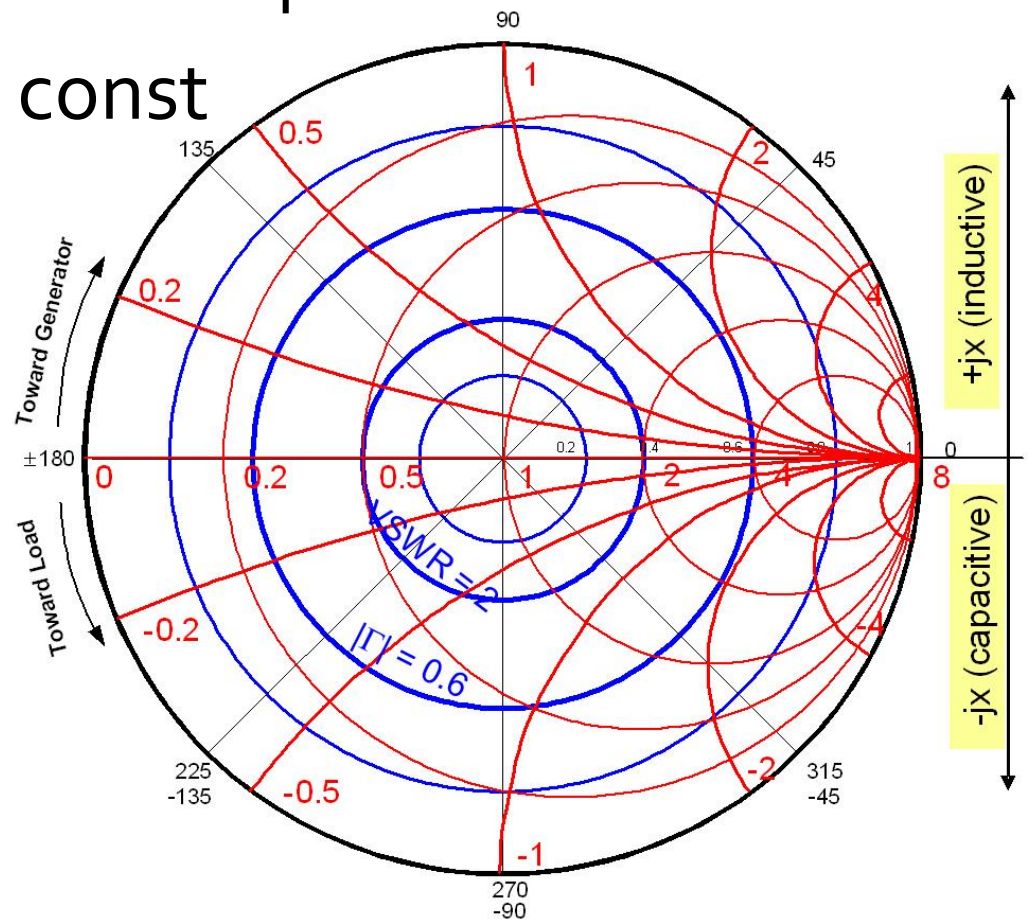

Cercuri de factor de calitate constant

- Diagrama Smith

$$Q = \frac{X}{R} = \frac{G}{B} = const$$

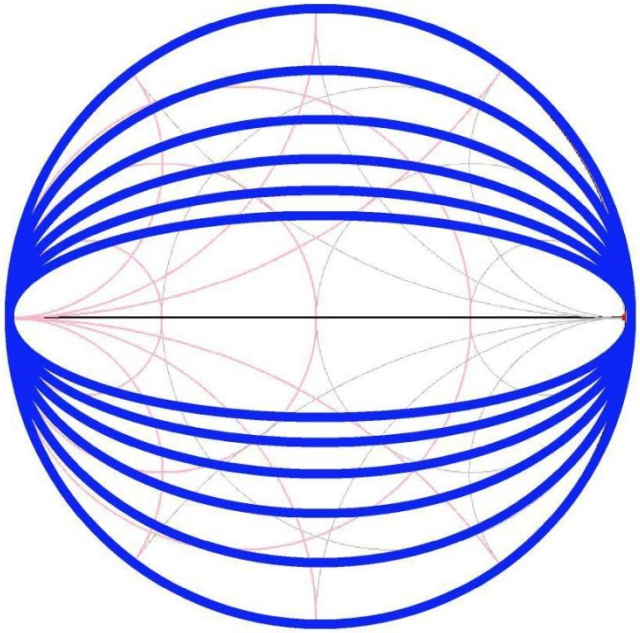

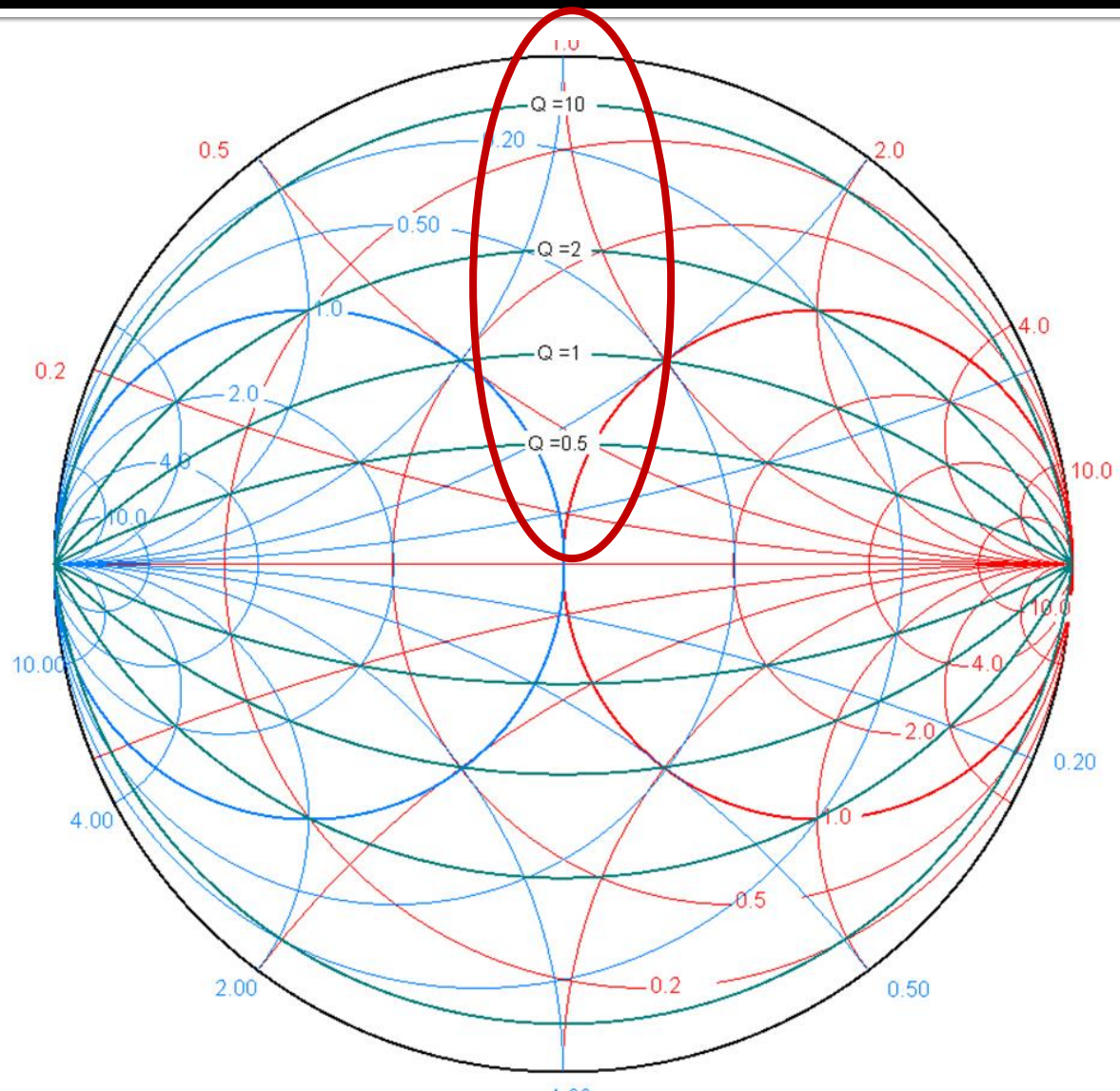

Factor de calitate - banda

- Factor de calitate ridicat echivalent cu banda ingusta

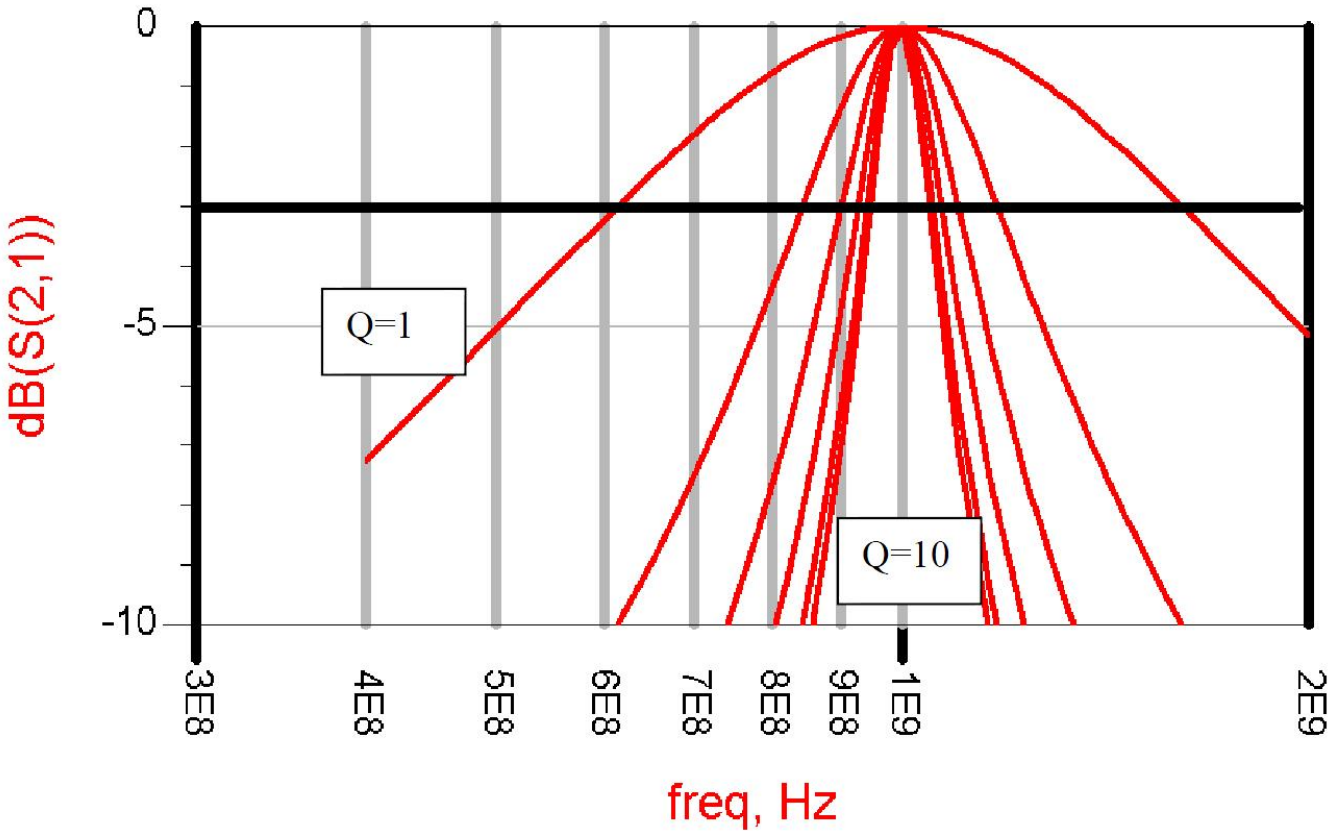

Amplificator de banda larga

- Adaptarea pentru castig maxim la doua frecvente genereaza o comportare dezechilibrata

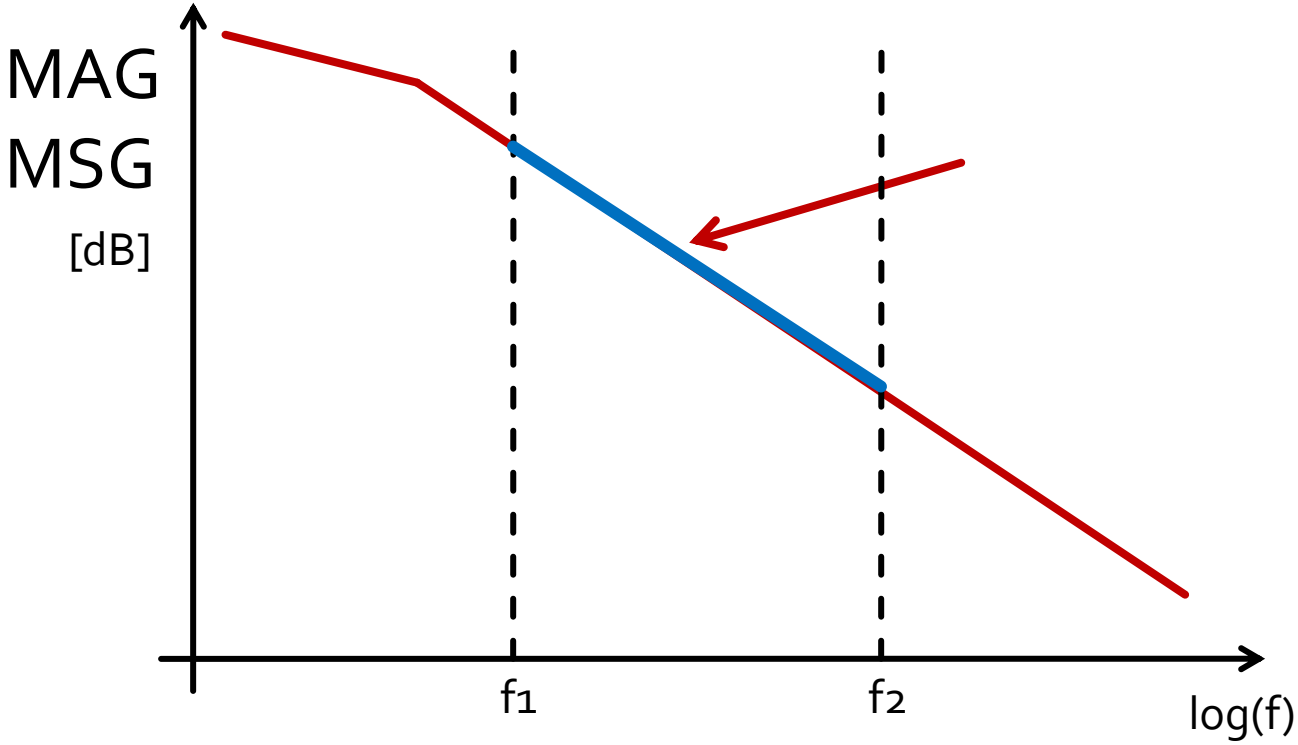

Amplificator de banda larga

- Adaptare pentru castig maxim la frecventa maxima
- Dezadaptare controlata la frecventa minima
  - eventual la mai multe frecvente din banda

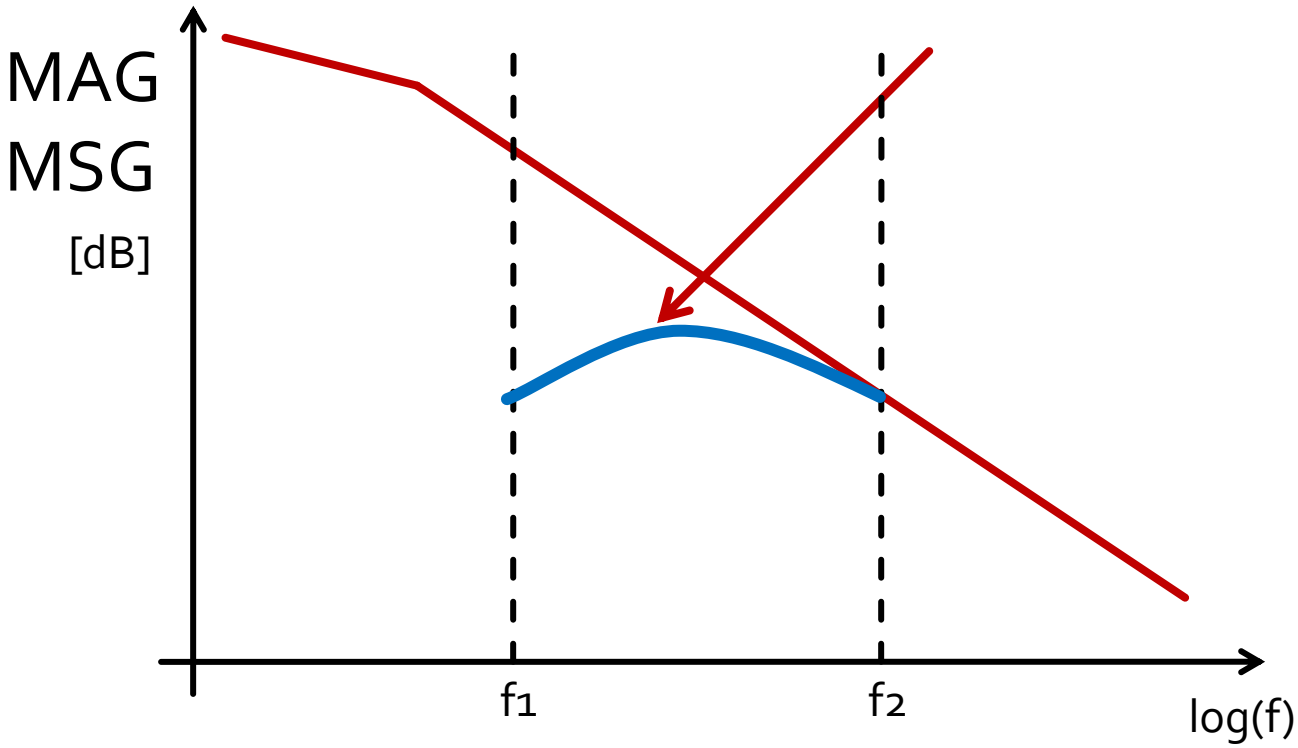

Proiectare pentru castig impus

- Se realizeaza cu asumarea **unilaterala** a amplificatorului

Permite tratarea separata a intrarii si iesirii

$$G_{TU} = |S_{21}|^2 \cdot \frac{1-|\Gamma_S|^2}{|1-S_{11}\cdot\Gamma_S|^2} \cdot \frac{1-|\Gamma_L|^2}{|1-S_{22}\cdot\Gamma_L|^2}$$

$$S_{12} \cong 0 \qquad \Gamma_{in} = S_{11}$$

- Castig maxim

$$\Gamma_S = S_{11}^*$$

$$\Gamma_L = S_{22}^*$$

$$G_{TU\,\max} = \frac{1}{1-|S_{11}|^2} \cdot |S_{21}|^2 \cdot \frac{1}{1-|S_{22}|^2}$$

Factor de merit unilateral

- Permite estimarea erorii induse de ipoteza tranzistorului unilateral

$$\boxed{S_{12} \cong 0}$$

$$\frac{1}{(1+U)^2} < \frac{G_T}{G_{TU}} < \frac{1}{(1-U)^2} \qquad U = \frac{|S_{12}| \cdot |S_{21}| \cdot |S_{11}| \cdot |S_{22}|}{\left(1-|S_{11}|^2\right) \cdot \left(1-|S_{22}|^2\right)}$$

- Se calculeaza U si abaterea maxima si minima a lui G_{TU} fata de G_T
  - aceasta abatere trebuie prevazuta in proiectare ca rezerva pentru castigul maxim

$$-20 \cdot \log(1+U) < G_T[dB] - G_{TU}[dB] < -20 \cdot \log(1-U)$$

Exemplu

- ATF-34143 **at Vds=3V Id=20mA**.
- @5GHz
  - S11 = 0.64∠139°
  - S12 = 0.119∠-21°
  - S21 = 3.165 ∠16°
  - S22 = 0.22 ∠146°

$$U = \frac{|S_{12}| \cdot |S_{21}| \cdot |S_{11}| \cdot |S_{22}|}{\left(1 - |S_{11}|^2\right) \cdot \left(1 - |S_{22}|^2\right)} = 0.094$$

$$-0.783\,dB < G_T[dB] - G_{TU}[dB] < 0.861\,dB$$

Exemplu

- ATF-34143 **at Vds=3V Id=20mA**.
- @5GHz

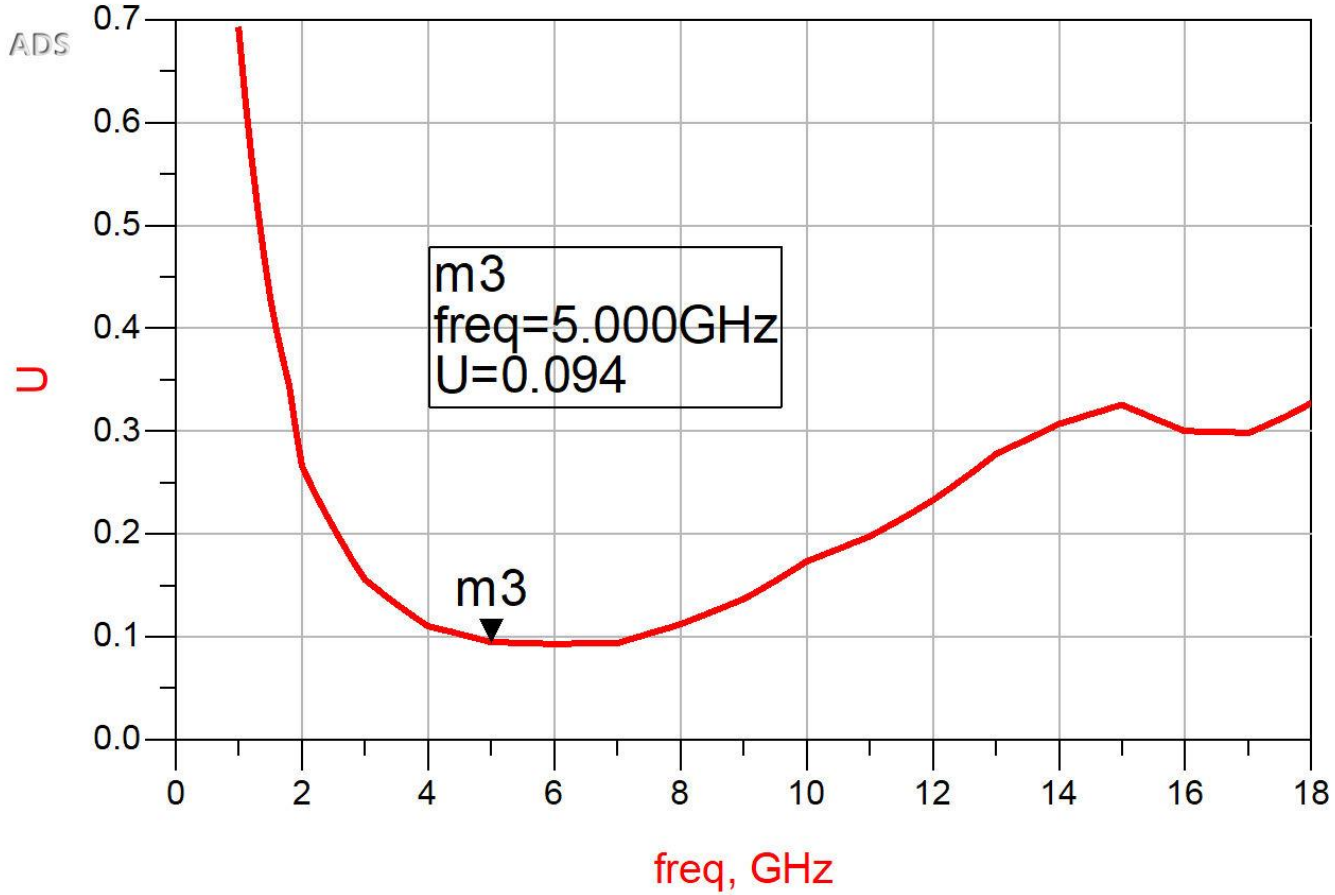

Exemplu

- ATF-34143 **at Vds=3V Id=20mA**.
- @5GHz

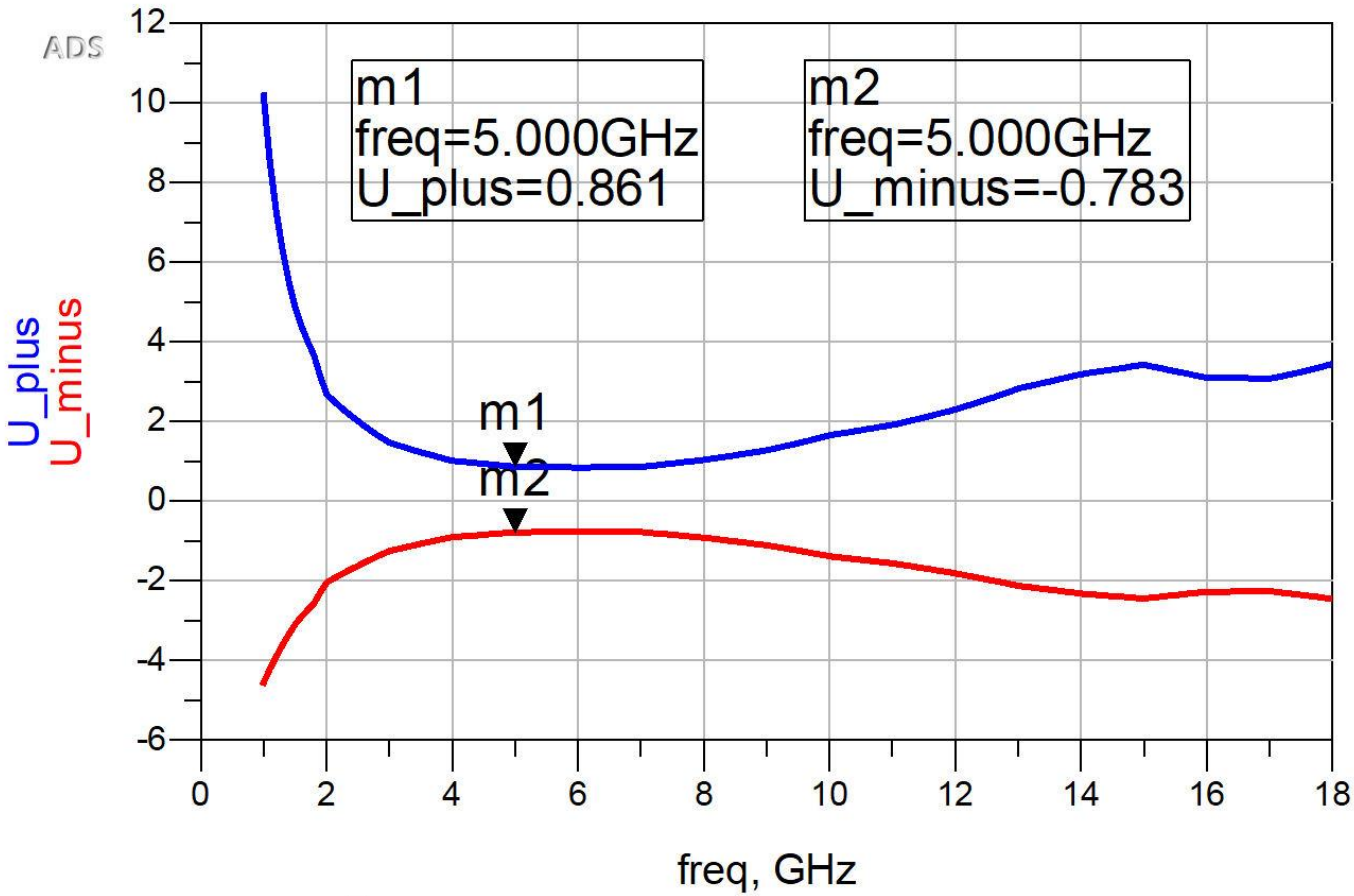

Proiectare pentru castig impus

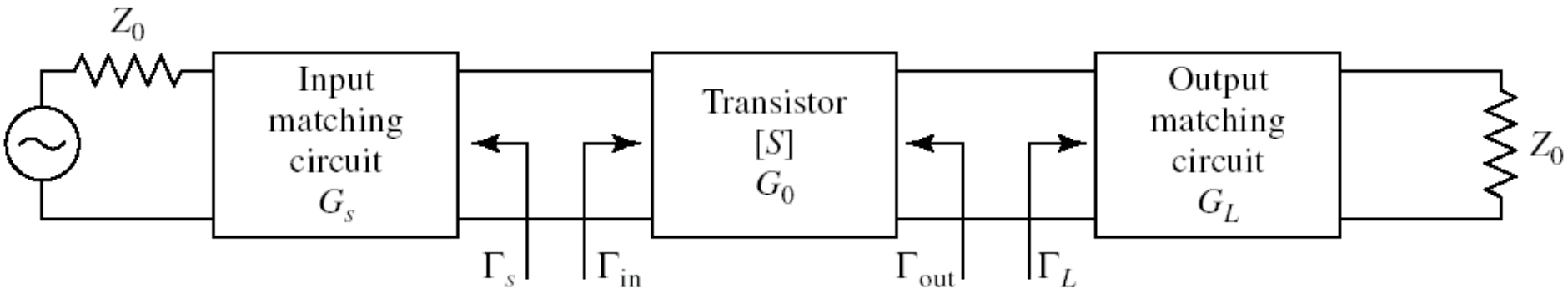

- Daca ipoteza tranzistorului unilateral este justificata:

$$G_{TU} = \frac{1-|\Gamma_S|^2}{|1-S_{11}\cdot\Gamma_S|^2}\cdot|S_{21}|^2\cdot\frac{1-|\Gamma_L|^2}{|1-S_{22}\cdot\Gamma_L|^2}$$

$$G_S = \frac{1-|\Gamma_S|^2}{|1-S_{11}\cdot\Gamma_S|^2} \qquad G_0 = |S_{21}|^2 \qquad G_L = \frac{1-|\Gamma_L|^2}{|1-S_{22}\cdot\Gamma_L|^2}$$

$$\boxed{G_S = G_S(\Gamma_S)} \qquad \boxed{G_L = G_L(\Gamma_L)}$$

Proiectare pentru castig impus

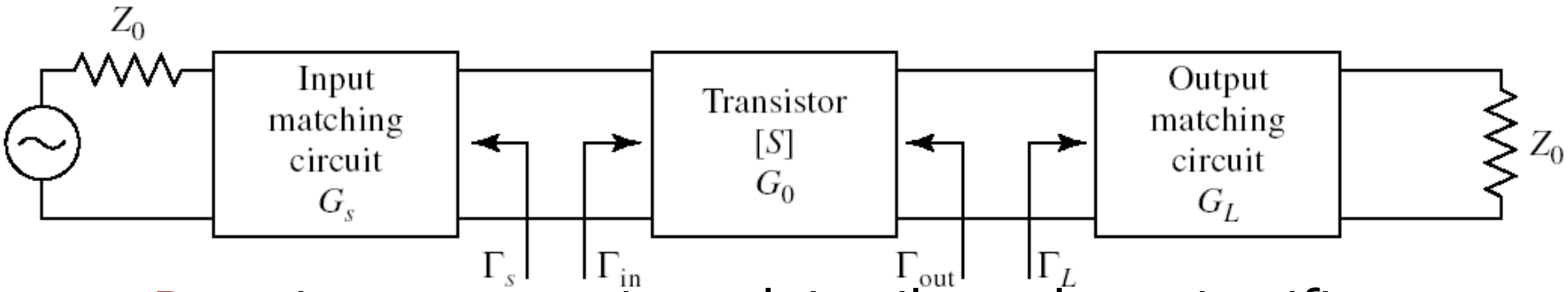

- **Daca** ipoteza tranzistorului unilateral este justificata:
  - castigul adaugat prin adaptare mai buna la intrare **nu** depinde de adaptarea la iesire $G_S = G_S(\Gamma_S)$
  - castigul adaugat prin adaptare mai buna la iesire **nu** depinde de adaptarea la intrare $G_L = G_L(\Gamma_L)$
- Adaptarile la intrare/iesire pot fi tratate independent
  - Se pot impune cerinte diferite intrare/iesire
  - se tine cont de compunerea castigurilor generate

$$G_T = G_S \cdot G_0 \cdot G_L \qquad G_T[dB] = G_S[dB] + G_0[dB] + G_L[dB]$$

Adaptarea la intrare

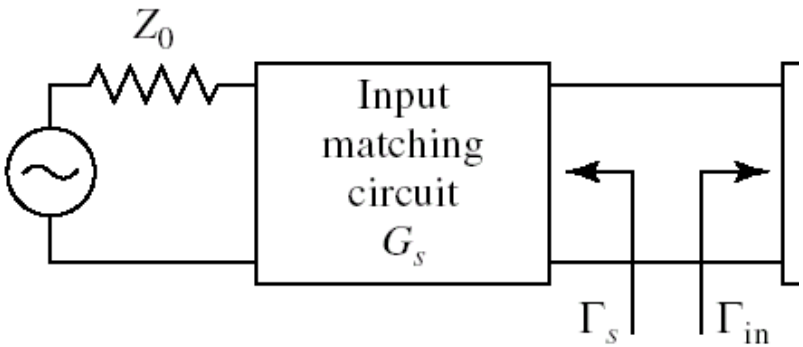

$$G_S = \frac{1-|\Gamma_S|^2}{|1-S_{11}\cdot\Gamma_S|^2}$$

- Castig maxim pentru adaptare complex conjugata (putere) la intrare

$$\Gamma_S = S_{11}^* \Rightarrow \qquad G_{S\max} = \frac{1}{1-|S_{11}|^2}$$

- Pentru oricare alta retea de adaptare

$$G_S = \frac{1-|\Gamma_S|^2}{|1-S_{11}\cdot\Gamma_S|^2} < G_{S\max} = \frac{1}{1-|S_{11}|^2}$$

Exemplu

- ATF-34143 **at Vds=3V Id=20mA**.
- @5GHz
  - S11 = 0.64∠139°
  - S12 = 0.119∠-21°
  - S21 = 3.165 ∠16°
  - S22 = 0.22 ∠146°

$$U = \frac{|S_{12}| \cdot |S_{21}| \cdot |S_{11}| \cdot |S_{22}|}{\left(1-|S_{11}|^2\right) \cdot \left(1-|S_{22}|^2\right)} = 0.094$$

$$-0.783\,dB < G_T[dB] - G_{TU}[dB] < 0.861\,dB$$

$$G_{TU\,\max} = \frac{1}{1-|S_{11}|^2} \cdot |S_{21}|^2 \cdot \frac{1}{1-|S_{22}|^2} = 17.83$$

$$G_{TU\,\max}[dB] = 12.511\,dB$$

$$G_{S\,\max} = \frac{1}{1-|S_{11}|^2} = 1.694 = 2.289\,dB$$

$G_S(\Gamma_S)$

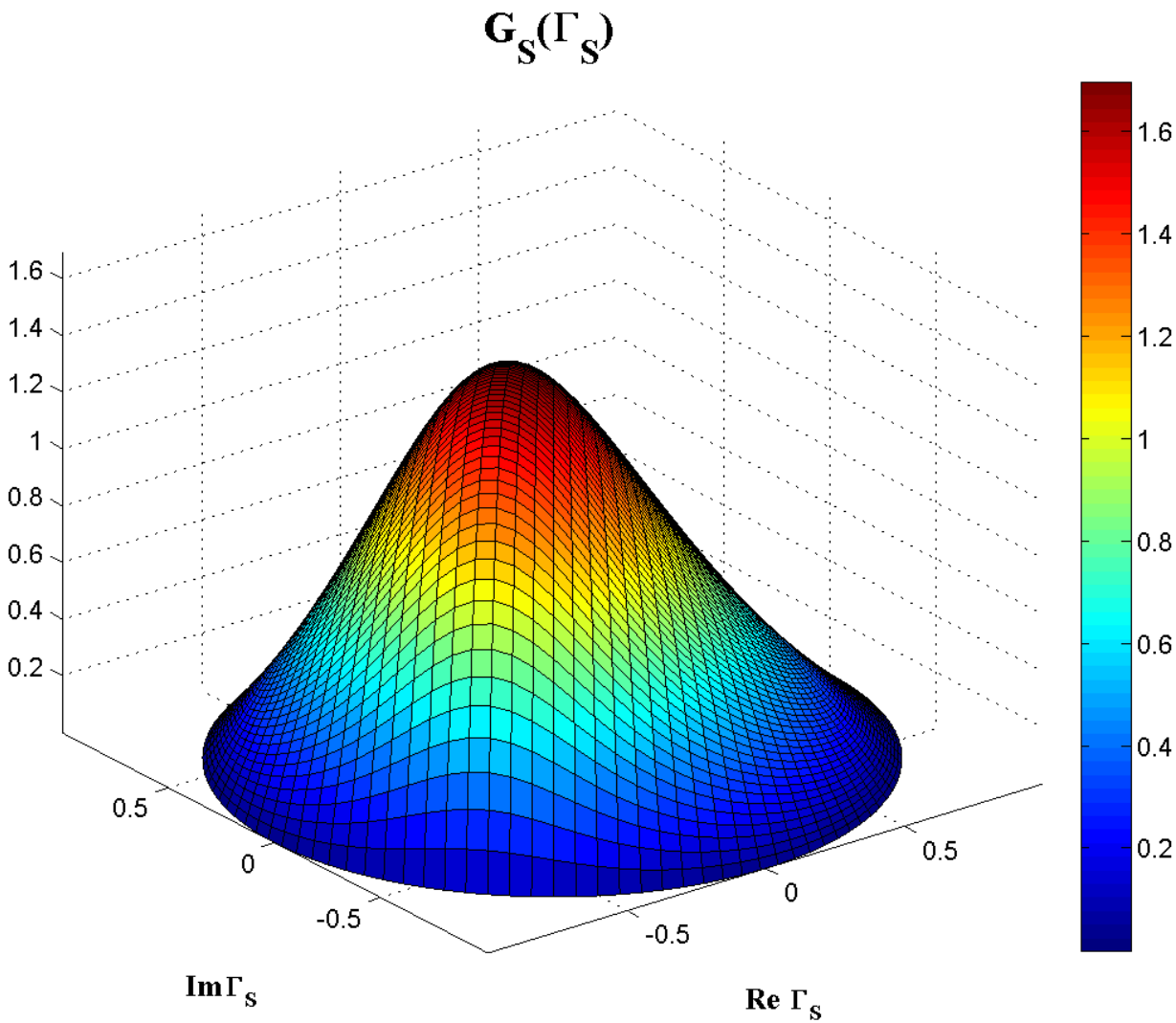

$$G_S = \frac{1-|\Gamma_S|^2}{|1-S_{11}\cdot\Gamma_S|^2}$$

Contour map/lines

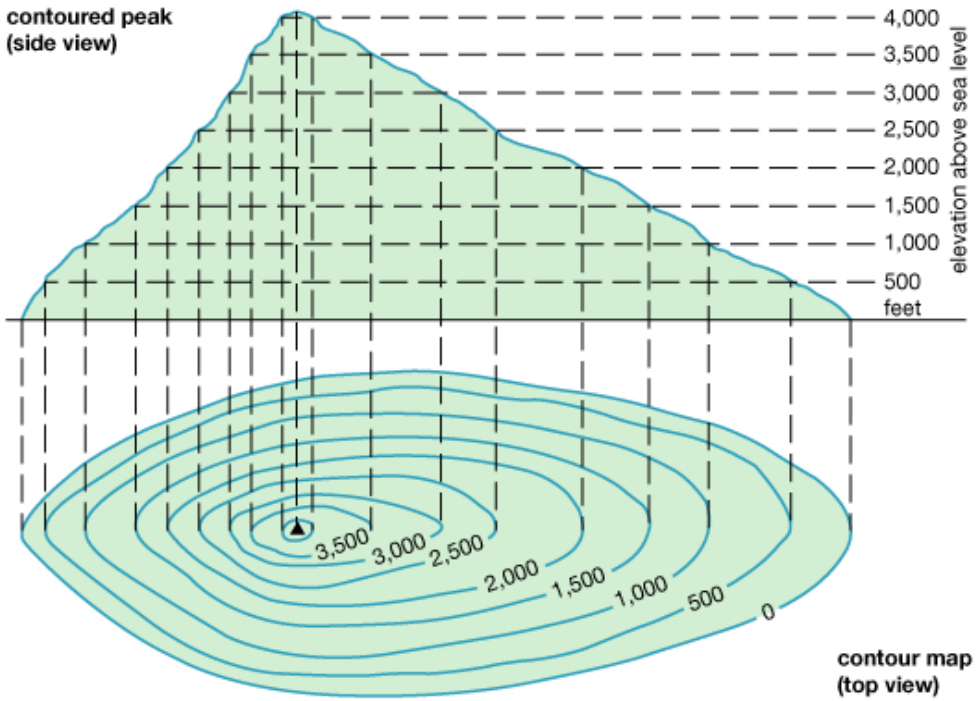

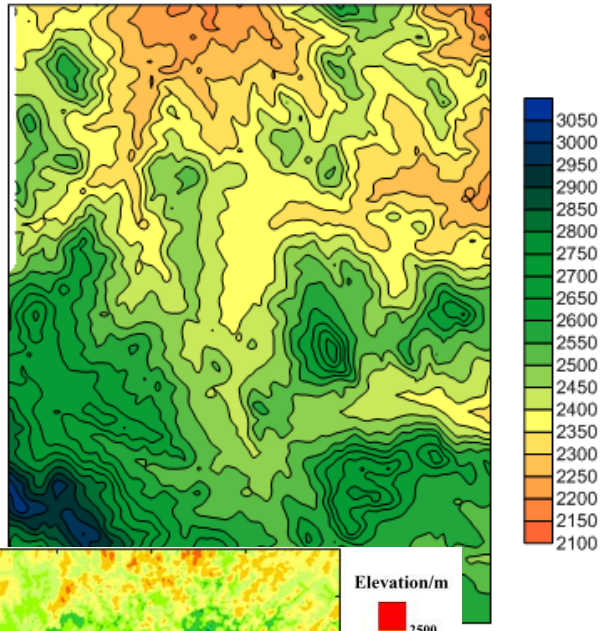

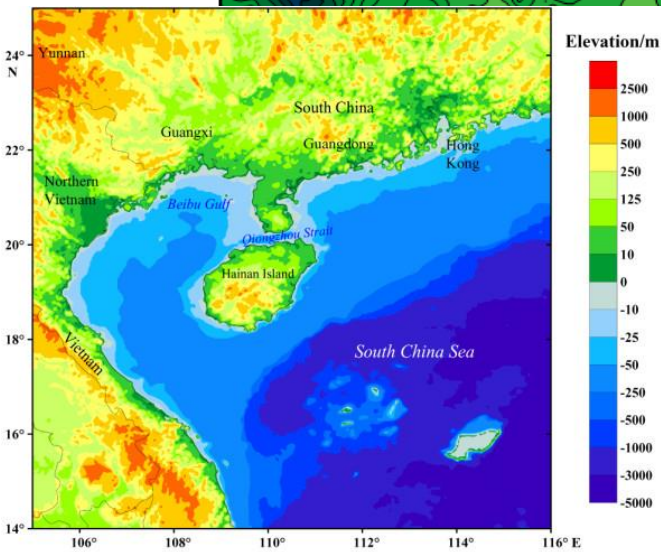

$G_S(\Gamma_S)$, nivel constant

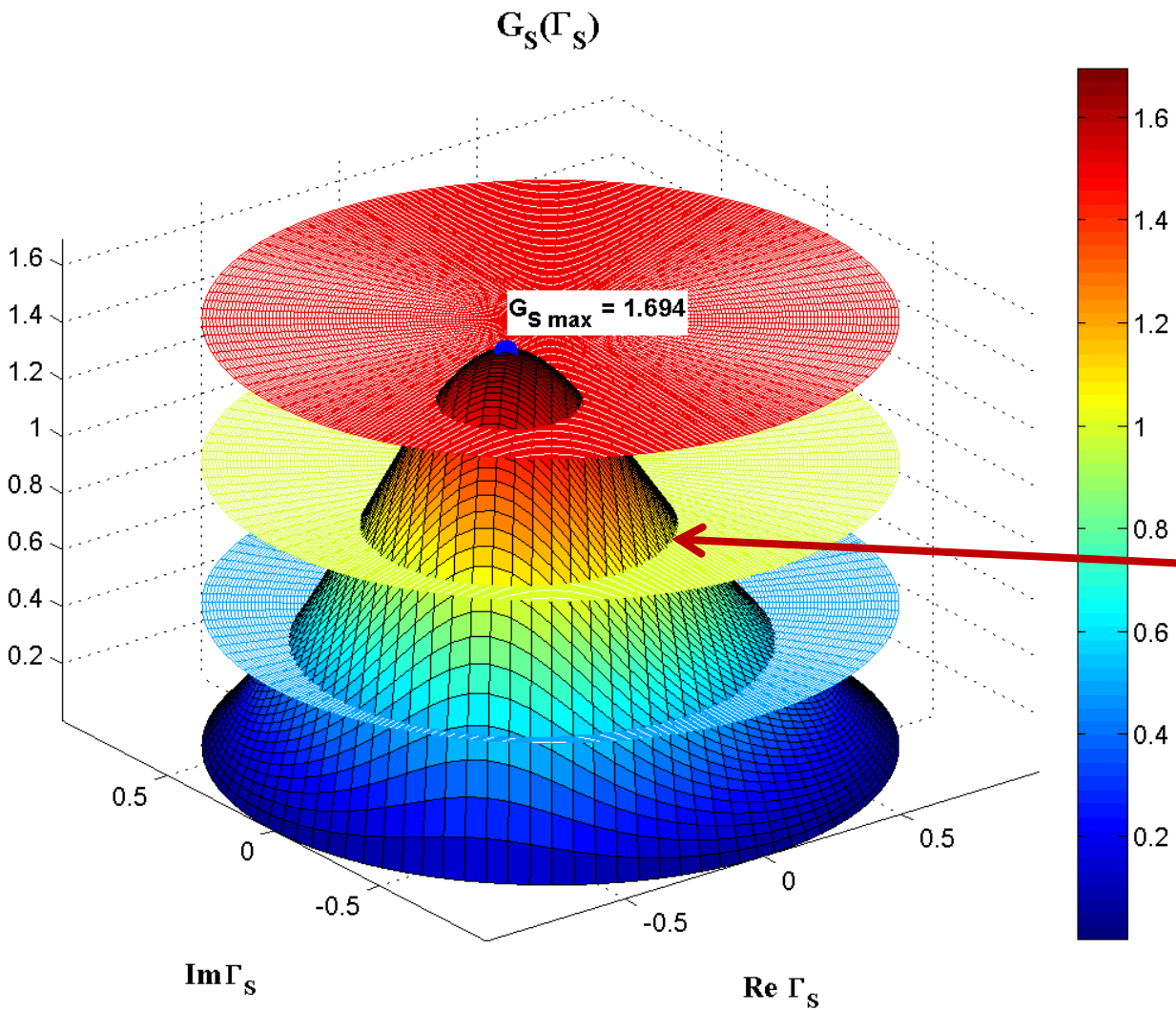

$G_S = 1.5$

$G_S = 1.0$

$G_S = 0.5$

Cercuri

$G_S(\Gamma_S)$, diagrama de nivel

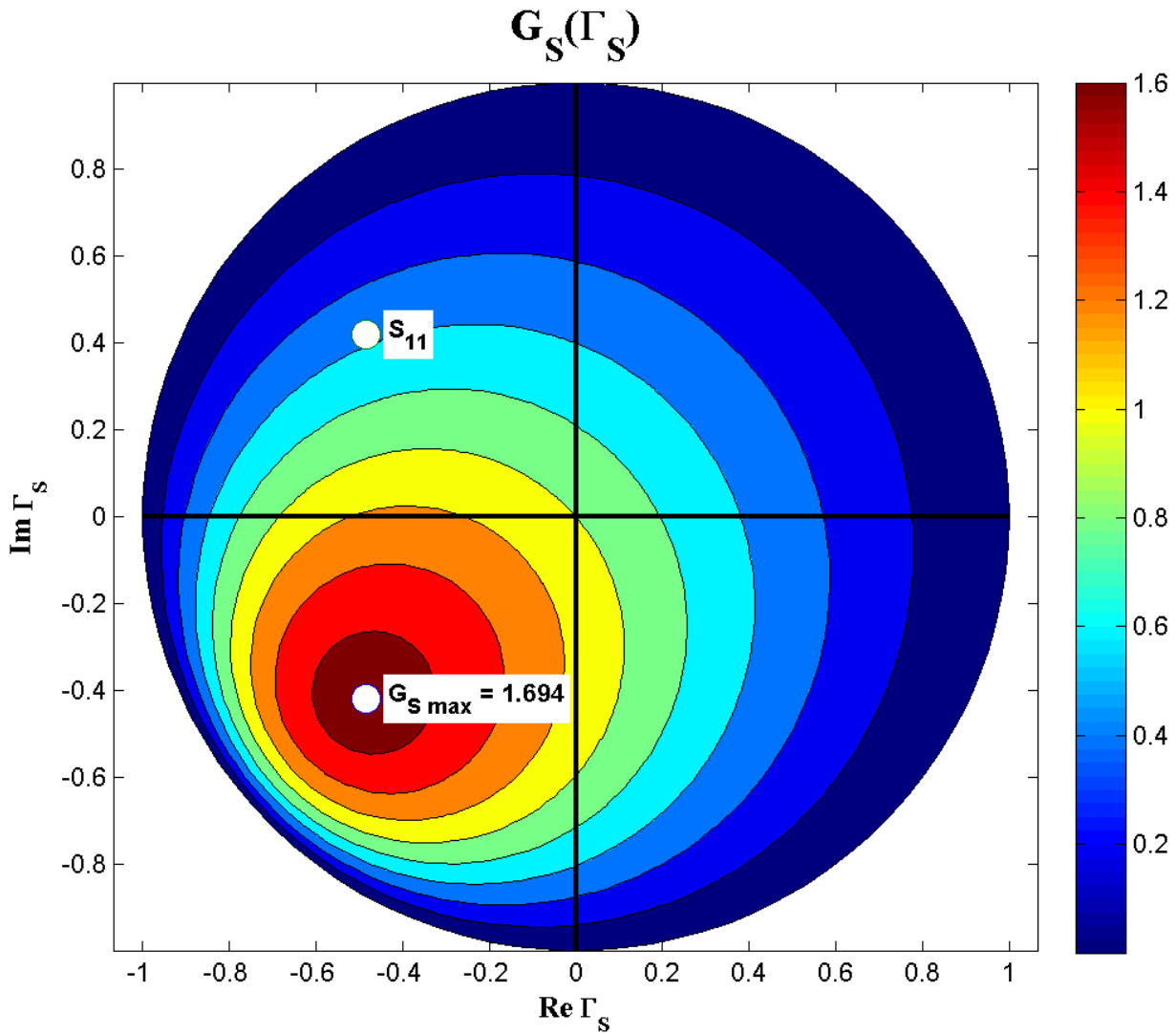

$$G_S = \frac{1-|\Gamma_S|^2}{|1-S_{11}\cdot\Gamma_S|^2}$$

$$G_{S\,\max} = G_S\big|_{\Gamma_S = S_{11}^*}$$

$G_S[dB](\Gamma_S)$, diagrama de nivel

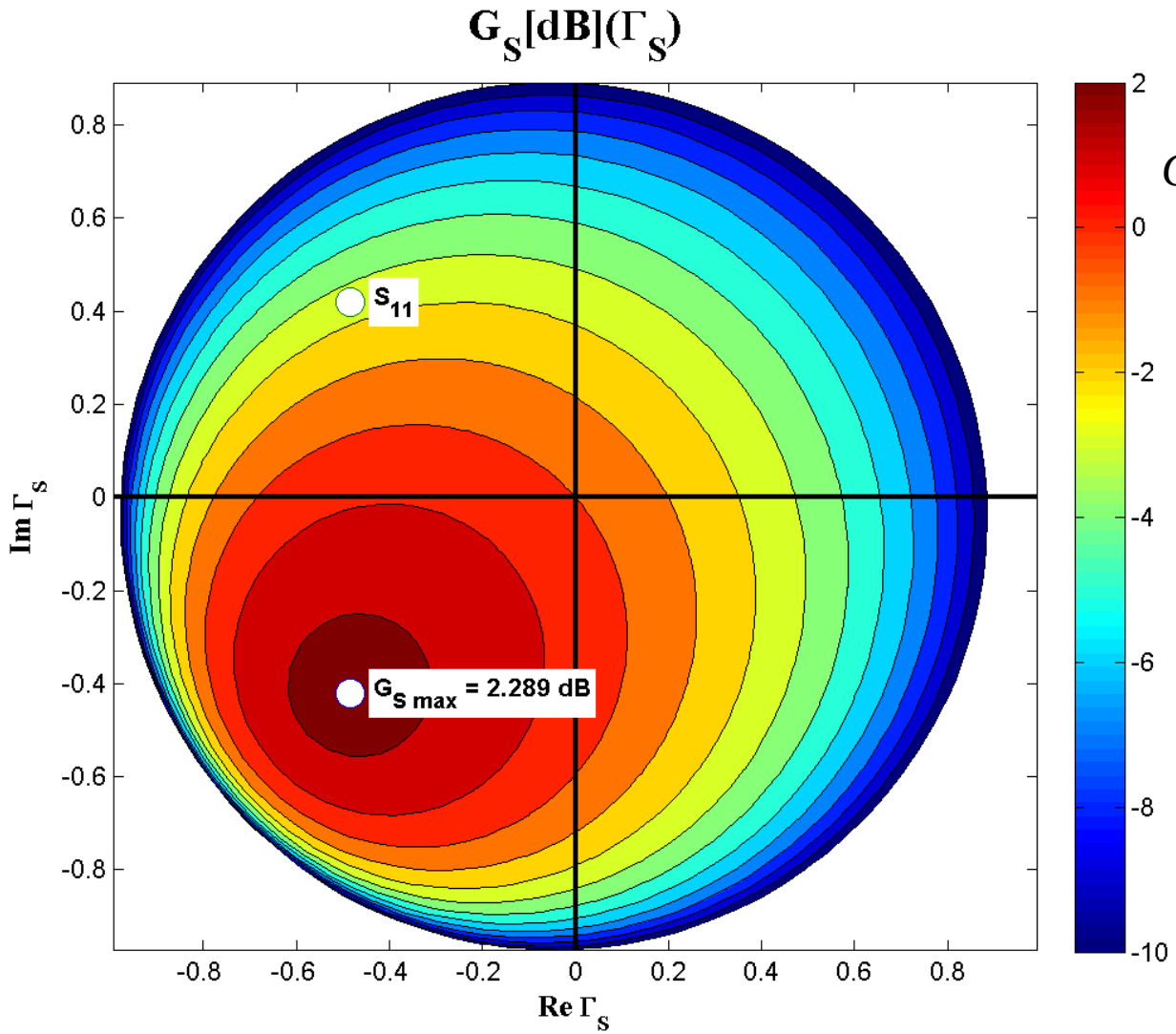

$$G_S[dB] = 10 \cdot \log\left(\frac{1-|\Gamma_S|^2}{|1-S_{11}\cdot\Gamma_S|^2}\right)$$

$$G_{S\,\max} = G_S\big|_{\Gamma_S = S_{11}^*}$$

Cercuri de castig constant la intrare

- Castig normat (coordonate liniare)

$$g_S = \frac{G_S}{G_{S\max}} = \frac{1-|\Gamma_S|^2}{|1-S_{11}\cdot\Gamma_S|^2}\cdot\left(1-|S_{11}|^2\right)<1$$

- Punctele de nivel constant, pentru un g_s<1 fixat

$$g_S\cdot|1-S_{11}\cdot\Gamma_S|^2 = \left(1-|\Gamma_S|^2\right)\cdot\left(1-|S_{11}|^2\right)$$

$$\left(g_S\cdot|S_{11}|^2+1-|S_{11}|^2\right)\cdot|\Gamma_S|^2 - g_S\cdot\left(S_{11}\cdot\Gamma_S+S_{11}^*\cdot\Gamma_S^*\right)=1-|S_{11}|^2-g_S$$

$$\Gamma_S\cdot\Gamma_S^* - \frac{g_S\cdot\left(S_{11}\cdot\Gamma_S+S_{11}^*\cdot\Gamma_S^*\right)}{1-(1-g_S)\cdot|S_{11}|^2} = \frac{1-|S_{11}|^2-g_S}{1-(1-g_S)\cdot|S_{11}|^2} \Big/ + \frac{g_S^2\cdot|S_{11}|^2}{\left[1-(1-g_S)\cdot|S_{11}|^2\right]^2}$$

Cercuri de castig constant la intrare

$$\left|\Gamma_S - \frac{g_S \cdot S_{11}^*}{1-(1-g_S)\cdot|S_{11}|^2}\right| = \frac{\sqrt{1-g_S}\cdot\left(1-|S_{11}|^2\right)}{1-(1-g_S)\cdot|S_{11}|^2} \qquad |\Gamma_S - C_S| = R_S$$

$$C_S = \frac{g_S \cdot S_{11}^*}{1-(1-g_S)\cdot|S_{11}|^2} \qquad R_S = \frac{\sqrt{1-g_S}\cdot\left(1-|S_{11}|^2\right)}{1-(1-g_S)\cdot|S_{11}|^2}$$

- Ecuatia unui cerc in planul complex in care reprezint Γ_S
- **Interpretare**: Orice punct Γ_S care reprezentat in planul complex se gaseste **pe** cercul desenat pentru $g_{cerc} = G_{cerc}/G_{Smax}$ va conduce la obtinerea castigului $G_S = G_{cerc}$
  - Orice punct **in exteriorul** acestui cerc va genera un castig $G_S < G_{cerc}$
  - Orice punct **in interiorul** acestui cerc va genera un castig $G_S > G_{cerc}$

Cercuri de castig constant la intrare

$$C_S = \frac{g_S \cdot S_{11}^*}{1-(1-g_S)\cdot|S_{11}|^2} \qquad R_S = \frac{\sqrt{1-g_S}\cdot\left(1-|S_{11}|^2\right)}{1-(1-g_S)\cdot|S_{11}|^2}$$

- Centrele cercurilor se gasesc pe segmentul care uneste $\Gamma_S = S_{11}^*$ cu centrul diagramei Smith
- Cercurile se traseaza (traditional, CAD) in **coordonate logaritmice** ([dB])
  - relatiile de calcul sunt in coordonate **liniare !**
- Cercul corespunzator lui G_S = 0 dB trece prin origine

Cercuri de castig constant la iesire

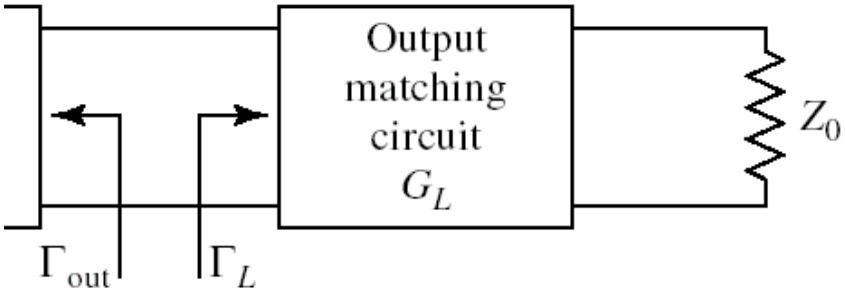

$$G_L = \frac{1-|\Gamma_L|^2}{|1-S_{22}\cdot\Gamma_L|^2}$$

- Castig maxim $\Gamma_L = S_{22}^* \Rightarrow$ $G_{L\max} = \dfrac{1}{1-|S_{22}|^2}$

$$g_L = \frac{G_L}{G_{L\max}} = \frac{1-|\Gamma_L|^2}{|1-S_{22}\cdot\Gamma_L|^2}\cdot\left(1-|S_{22}|^2\right) < 1$$

- Calcul similar

$$C_L = \frac{g_L\cdot S_{22}^*}{1-(1-g_L)\cdot|S_{22}|^2} \qquad R_L = \frac{\sqrt{1-g_L}\cdot\left(1-|S_{22}|^2\right)}{1-(1-g_L)\cdot|S_{22}|^2}$$

- Exemplu

$$G_{L\max} = \frac{1}{1-|S_{22}|^2} = 1.051 = 0.215\ dB$$

$G_L(\Gamma_L)$

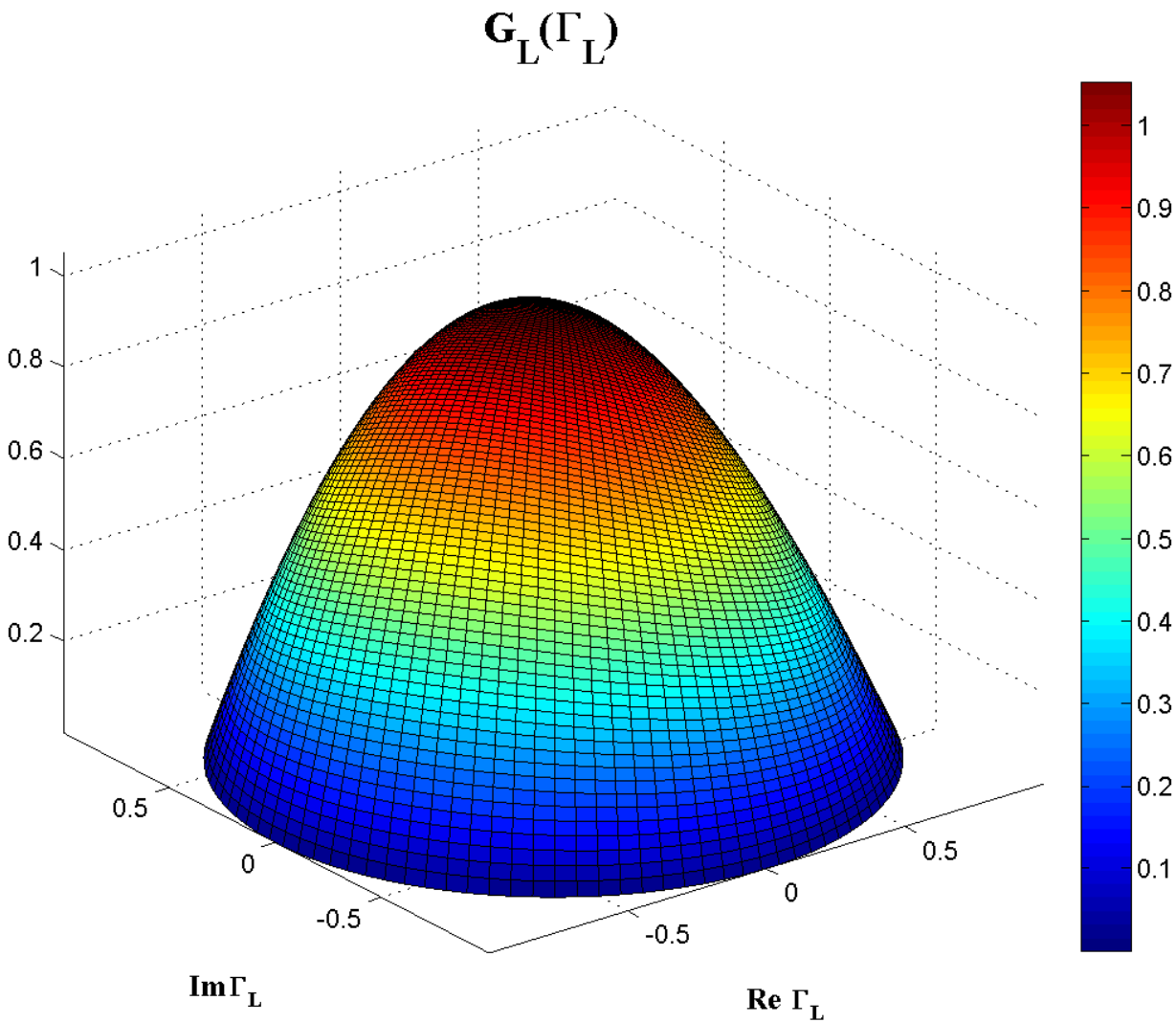

$$G_L = \frac{1-|\Gamma_L|^2}{|1-S_{22}\cdot\Gamma_L|^2}$$

$G_L(\Gamma_L)$, diagrama de nivel

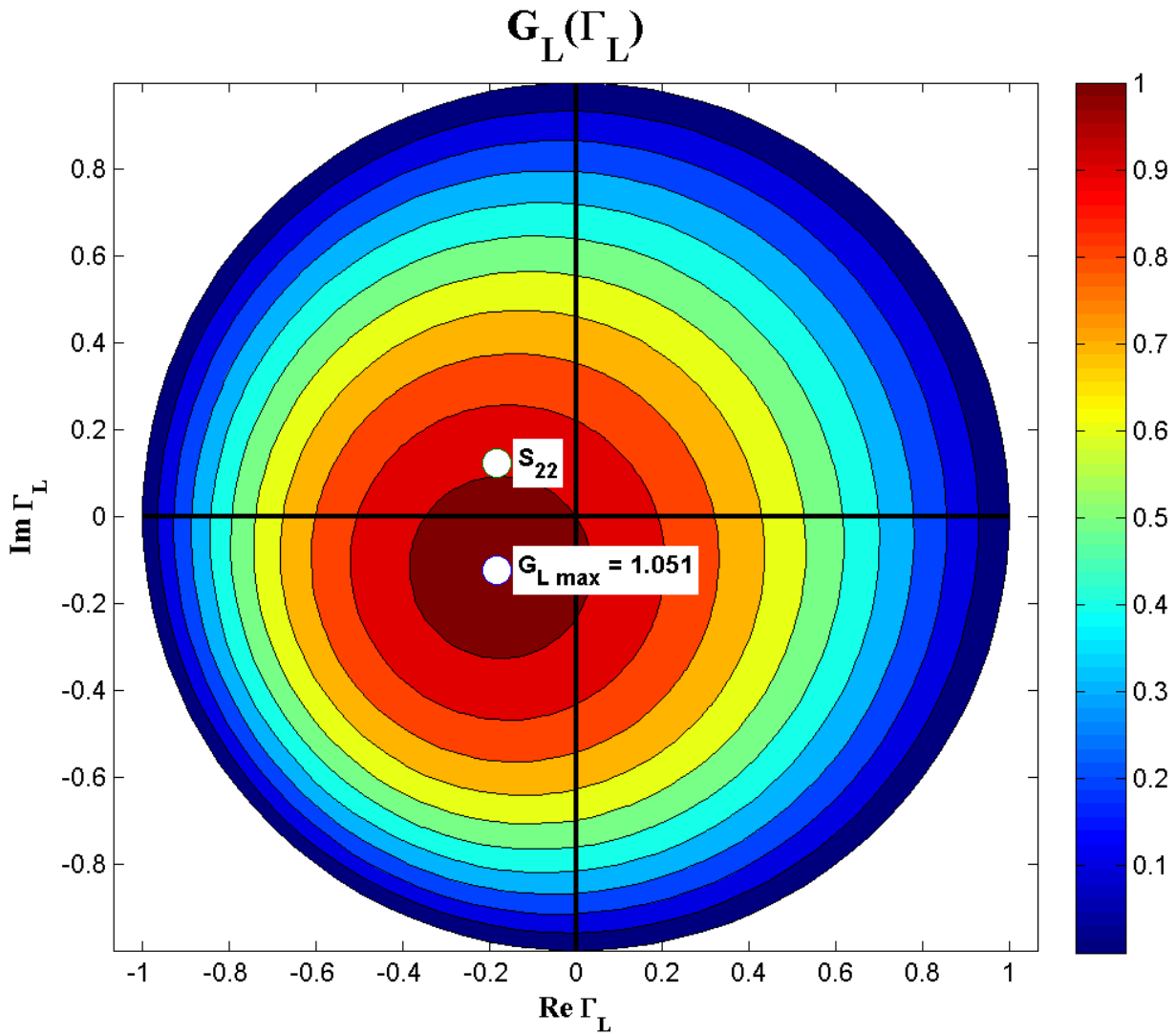

$$G_L = \frac{1-|\Gamma_L|^2}{|1-S_{22}\cdot\Gamma_L|^2}$$

$$G_{L\max} = G_L\big|_{\Gamma_L = S_{22}^*}$$

$G_L[dB](\Gamma_L)$, diagrama de nivel

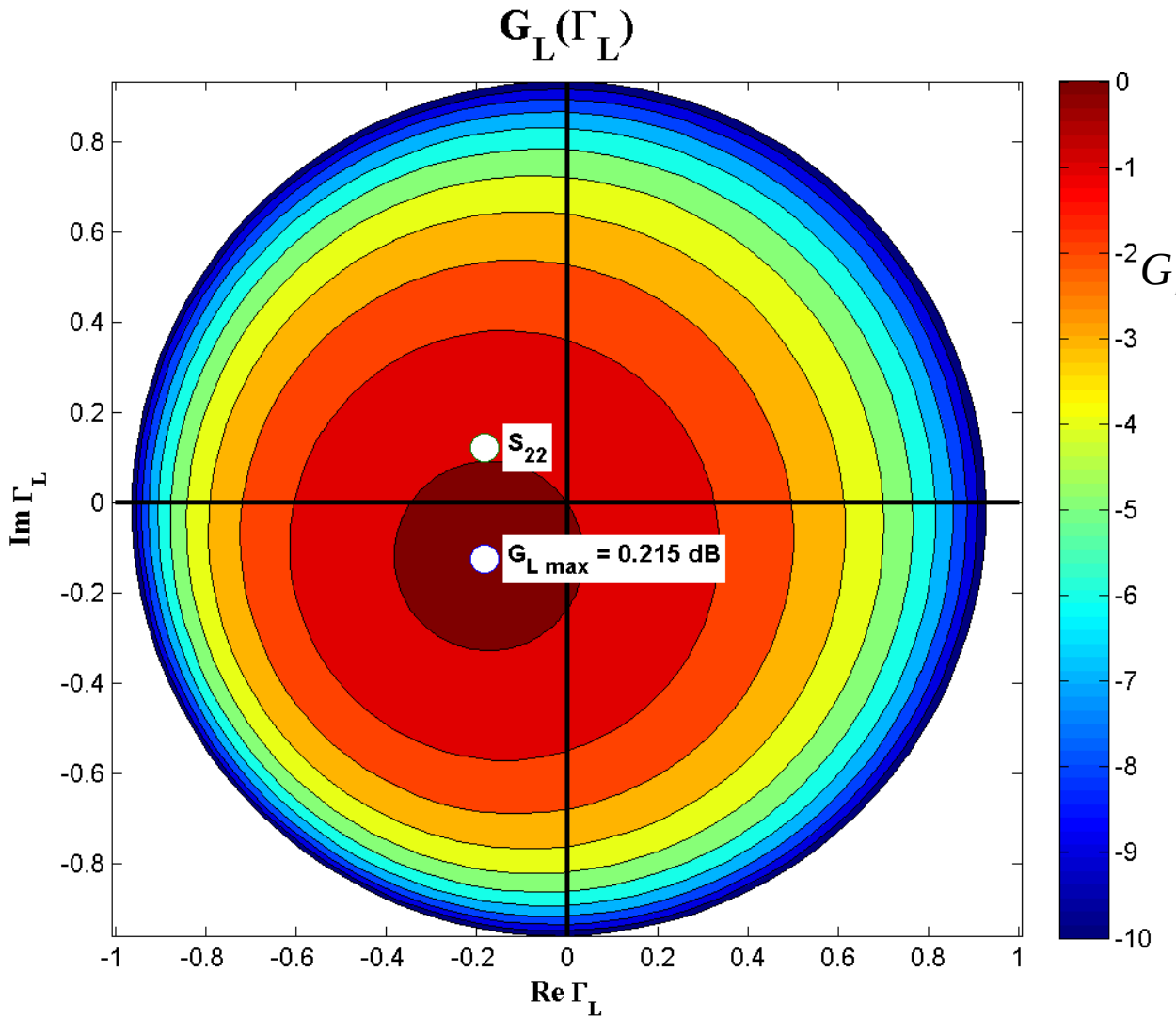

$$G_L[dB] = 10 \cdot \log\left(\frac{1-|\Gamma_L|^2}{|1-S_{22}\cdot\Gamma_L|^2}\right)$$

$$G_{L\max} = G_L\big|_{\Gamma_L = S_{22}^*}$$

ADS

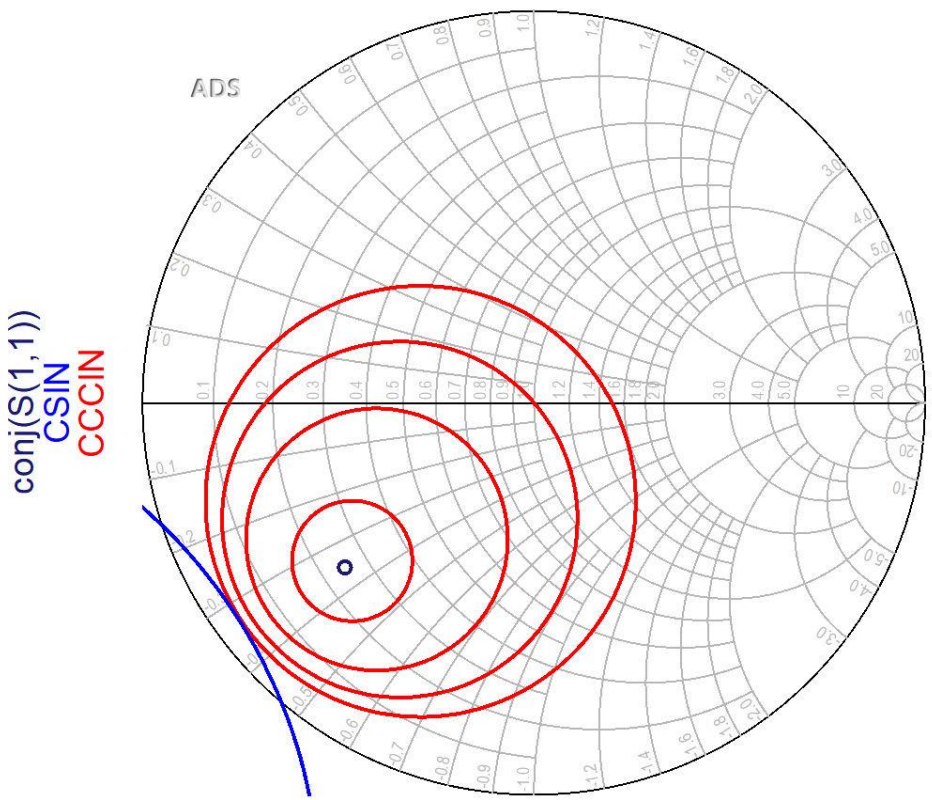

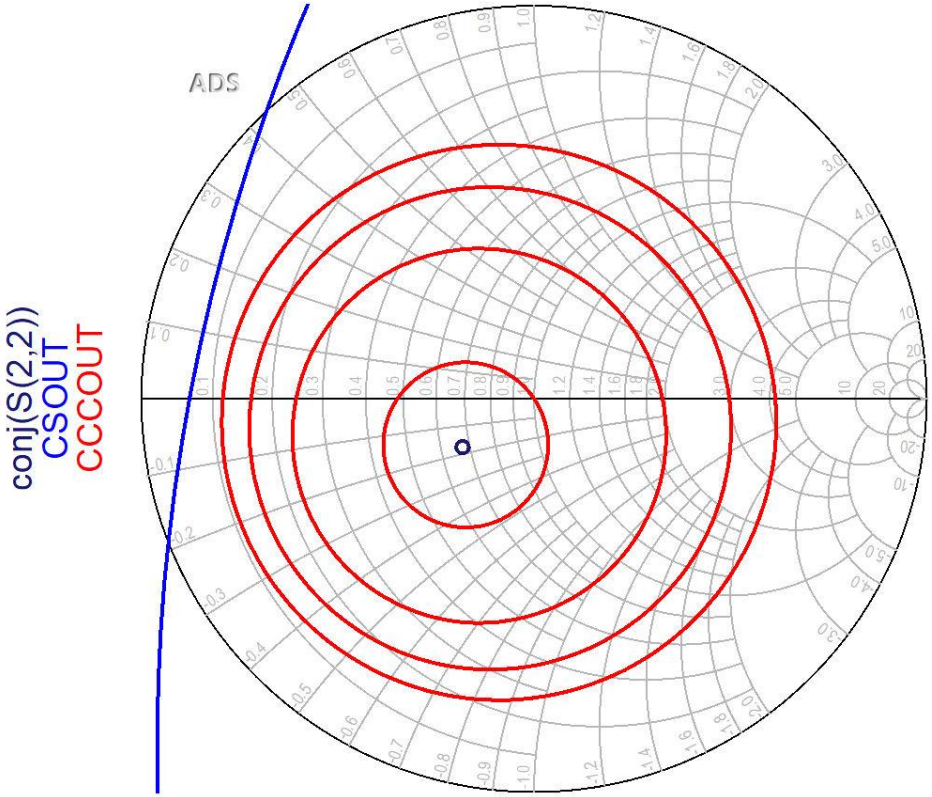

- Cercurile se reprezinta pentru valorile cerute in dB
- Este utila calcularea G_{Smax} si G_{Lmax} anterior

Proiectare pentru castig impus

- Se calculeaza G_o, G_{Smax} , G_{Lmax}
- Pentru obtinerea castigului impus se **aleg** valorile suplimentare necesare (suplimentar la G_o)
  - se tine cont de abaterea caracterizata de factorul de merit U

$$G_{dorit}[dB] = G_{S\_dor}[dB] + G_0[dB] + G_{L\_dor}[dB]$$

- Se reprezinta cercurile de castig pentru valorile alese G_{S_dor} , G_{L_dor}
- Se proiecteaza retelele de adaptare care muta coeficientul de reflexie **pe** sau **in interiorul** cercurilor dorite (in functie de aplicatie)

Contact

- Laboratorul de microunde si optoelectronica
- http://rf-opto.etti.tuiasi.ro
- rdamian@etti.tuiasi.ro